Film-Tech

The information contained in this Adobe Acrobat pdf file is provided at your own risk and good judgment.

These manuals are designed to facilitate the exchange of information related to cinema projection and film handling, with no warranties nor obligations from the authors, for qualified field service engineers.

If you are not a qualified technician, please make no adjustments to anything you may read about in these Adobe manual downloads.

www.film-tech.com

eCNA-150 Automation

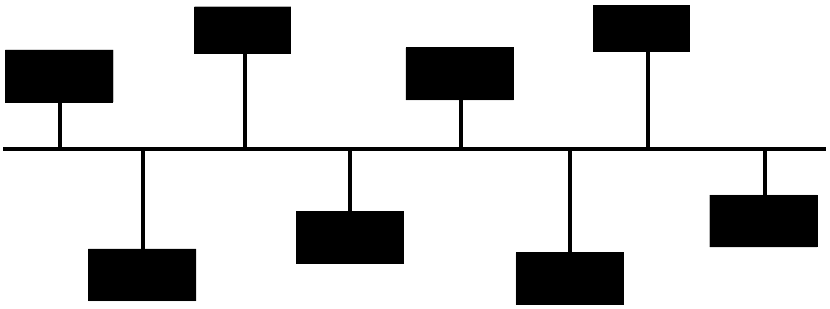

Operation and Installation Manual

STRONG Cinema Products

Revision 1.01
Sept 2005

eCNA-150
Setup and Operation Manual

PR013 Revision 1.01

This manual covers the setup and operation of the eCNA Cinema Automation..

Optional CineNet and related equipment is covered in the following product reference manuals:

- PR001 CNA Installation Manual
- PR002 CNA-200 Setup and Operation Manual
- PR003 CNA-150 Setup and Operation Manual
- PR004 CNA-100 Setup and Operation Manual
- PR005 QDC-400 Installation and Setup Manual
- PR006 ACP-50 Installation and Setup Manual
- PR007 RVC-5 Installation and Setup Manual
- PR008 PCI-64 Gateway Interface Installation
- PR009 CineNet Host Software
- PR010 RCM-10/RSM-10/RSM-20 Installation and Operation Manual
- PR011 Strong Dimmer Installation, Setup, and Operation Manual
- PR012 eCNA-100 Automation Manual
- PR013 eCNA-150 Automation Manual
- PR014 eCNA-200 Automation Manual
- PR016 Strong FP350 Installation and Operation Manual
- PR017 Eprad FP350 Installation and Operation Manual
- PR018 Paging system Setup and Installation Manual
- PR019 VNC Setup and Operation Manual
- PR020 CineSuite Installation and Operation Manual

Warranty

CineNet automation products, sold by STRONG INTERNATIONAL, are warranted against defects in materials and workmanship for one year from the date of purchase. There are no other express or implied warranties and no warranty of merchantability or fitness for a particular purpose.

During the warranty period, STRONG INTERNATIONAL will repair or, at its option, replace components that prove to be defective, provided the unit is shipped prepaid to the manufacturer directly or via and authorized distributor. Not covered by this warranty are defects caused by modification, misuse or accidents and any further damage caused by inadequate packing for service return.

STRONG INTERNATIONAL's obligation is restricted to the repair or replacement of defective parts and under no circumstances will STRONG INTERNATIONAL be liable for any other damage, either direct or consequential.

Information in this document is subject to change without notice. No part of this document may be reproduced or transmitted in any form or by any means, electronic or mechanical, for any purpose, without the express written permission of STRONG INTERNATIONAL.

© 1997 - 2005 STRONG INTERNATIONAL. All rights reserved..

Table of Contents:

Introduction 1

Section 1 2

System Overview 2
Product Description 3
Local I/O Network (LIN) 3
Local Synchronous Network (LSN) 3
System Components 4
Control Panel (Operator Interface) 4
Termination Panels 7
Dual Termination Panels 8
Console Termination Panel 8
Booth Termination Panel 9
Single Termination Panel 10
DIP Switch Settings 11
Switch Definitions 12
TCP/ IP (Ethernet) Configuration 16
RS-232 IP Configuration 16
HTML Network Configuration 18
Interface Hardware 20
TCP/ IP Networking Overview 22
Alarm Loudness setting 24
Checking the Network 25

Section 2 27

Setup 27
Menu Structure 27
Setup Supervisory 30
eCNA System 30
Setup Learn Times 36
Network Status 37
Copy 3 9
Network Copy 39
Local Copy 40
Control 41
Programming the eCNA-150 42
The INTERMISSION and CURTAIN CALL Keys 44

Section 3 46

Operation 46
Operating the eCNA-150 46
Soft Manual Overrides & LEDs 46

"Next State" feature 46
Check Focus Alarm 47
Cue Learn Function 47
Cue Window Factor 48
System Status Messages 52
Fault Condition Messages 52
Memory Faults 52
Synchronous Interlock Faults 53
Local Faults 55
Status Messages 56
Power Up Messages 57

Timing Diagrams for the eCNA-150 58

Addendum 64
Software Changes 64

Index 67

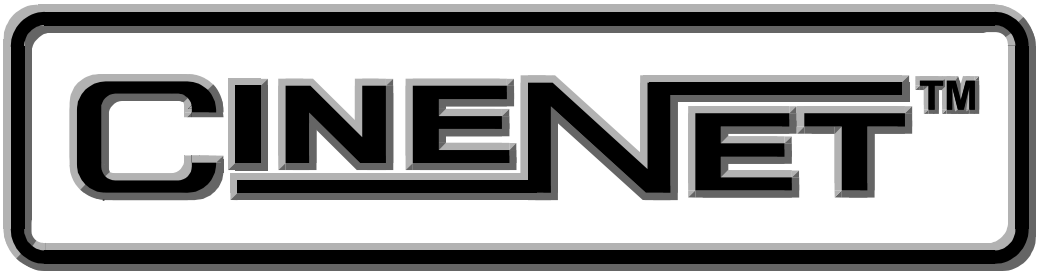

An
Introduction to
THE CINENET™ SYSTEM

Strong International's CINENET™ is an automation and control network designed specifically for the Motion Picture Theatre Industry. CINENET™ provides a low cost connection to various control and I/O devices in the projection booth, auditorium, and throughout the theatre complex. CINENET™ is divided into several network layers: The Local Synchronous Network (LSN) is a complex-wide data network that provides advanced synchronous projector control, user selected data transfer and real-time remote automation status. The Local I/O Network (LIN) is designed to provide remote I/O control for each screen in a complex, and a TCP/IP network running over Ethernet. This Ethernet option allows interfacing with various devices in the projection booth. The CINENET™ network offers many advantages over point-to-point wiring such as reduced installation costs, reduced wiring errors and high noise immunity. CINENET™ also allows management to program and access real-time status of all auditoriums in the theatre complex from a central location using a personal computer. Strong will continue to develop new CINENET™ products that will provide the control and flexibility the theatre industry demands.

Section 1
SYSTEM OVERVIEW

The eCNA-150® Cinema Network Automation is a CINENET™ compatible automation system specifically designed for the Motion Picture Theatre industry. The system is modular in design, consisting of the operator interface and system peripherals. The Main Computer and each peripheral device is defined by its common functions and locations in the booth. The devices within the system communicate with each other on a serial communications link. Automation systems and remote stations distributed throughout the booth and other areas of the multiplex communicate on a second serial communications link and can now utilize the TCP/ IP network protocol.

The eCNA-150 operator interface is user-friendly and intuitive. Once some basic rules are learned you will be programming and running basic programs in less than an hour.

The primary difference in the eCNA-150 when compared with the older CNA-150 is its ability to function over TCP/IP via a standard onboard ethernet connection and LAN.
This recent versatile addition to the CNA family will allow compatibility with the increasing number of devices which communicate over TCP/IP. Application software utilizing the protocols used with this exciting new interface is constantly being written, therefore refer to the eCNA protocol manual to see what is new.

A new application currently available to the user is an interface provided for use with a digital content player. The CAI (Cinema Automation Interface) protocol operates in conjunction with the content player in order to provide seamless transitions between events during a presentation. This protocol will allow the eCNA and a digital content player to share time on the screen without operator intervention or the audience experiencing any dead time while making transitions during a sequence of events.

The CINENET™ Gateway PC Card and Host software is available to enhance the operation of the eCNA-150 and provide a higher level of control. This product will provide a PC interface to the eCNA-150 LSN. The Host PC and software will allow management to access programming, data logging and diagnostic information from all systems connected to the network. Host networking can be done either through the LSN or Ethernet. Access to data and system upgrade software will also be available via the modem/Internet.

This manual provides the installer and user with the necessary information to install, setup and operate the eCNA-150 automation system. The installer is encouraged to read all sections of the manual before proceeding with the installation. If while installing or operating the eCNA-150 automation you find any part of the manual to be unclear or incorrect, please let us know. Call STRONG INTERNATIONAL at (800)-424-1215 for assistance.

Product Description

The eCNA-150 Cinema Network Automation System is a microprocessor based computer automation designed to automate all aspects of the theatre presentation. The Automation Network is briefly described below.

Local I/O Network (LIN)

Each system component is connected to the network and communicates via a five wire (data+, data-, power, ground, and shield) cable. This cable provides the serial data and power to the termination panels. This is called the "Local I/O Network"or “LIN”. The standard devices that make up the system are the:

1. Termination Panel(s)
2. eCNA-150 Control Panel

The eCNA-150 Automation Control Panel contains the Main or Master Computer of the system and each I/O device is connected to it via a serial communications link. The devices are connected in a “daisy-chain” method and can then be distributed within the booth according to their logical location.

Local Synchronous Network (LSN)

The "Local Synchronous Network" is a three-wire (data+, data-, and shield) data link that will support eCNA-150, eCNA-100 and eCNA-200's, remote stations, synchronous communications for interlock, network copy functions and a Host PC. The automation systems are connected together in a “daisy-chain” configuration, which allows the transmission line to continue from one unit to the next.

System Components

The standard components that make up the automation system are described in the following sections.

Control Panel (Operator Interface)

The automation controller and front panel interface is a standard 19" rack mount cabinet. The cabinet can be mounted in all Strong Console systems. The unit will house the main CPU, the front panel interface and the power supply for local and remote power for the Local I/O Network.

Communications to the local I/O devices and other remote eCNA-150 systems is accomplished via two serial ports on the Main CPU:

The Local I/O Network (LIN) Com Port - This is the interface for the Local I/O Network that will support the Main I/O Interface, the Console and Booth Termination Panels and other auxiliary devices.

The Local Synchronous Network (LSN) Com port - This is the interface for the Interlock and Copy function between eCNA-150 systems, Remote Monitors and PC Host.

The front panel is used to setup, program and run the shows. It also displays error and status messages to the user. The front panel incorporates nine manual override switches used for emergency manual control. These are rocker type switches and their general functions should be obvious to the operator. All manual controls circumvent the electronic circuitry giving the user the ability to control most major functions in the event of an automation failure. The manual control functions are listed below:

1. PROJECTOR - Maintained ON/AUTO
2. LAMP - Maintained
3. CHANGEOVER - Momentary OPEN/CLOSE
4. LENS & MASKING - Momentary FLAT/SCOPE
5. LENS & MASKING - Momentary SPECIAL
6. CURTAIN - Momentary OPEN/CLOSE
7. HOUSE LIGHTS - Momentary UP/DOWN
8. STAGE LIGHTS - Momentary UP/DOWN
9. AUXILIARY - Momentary ON1/ON2

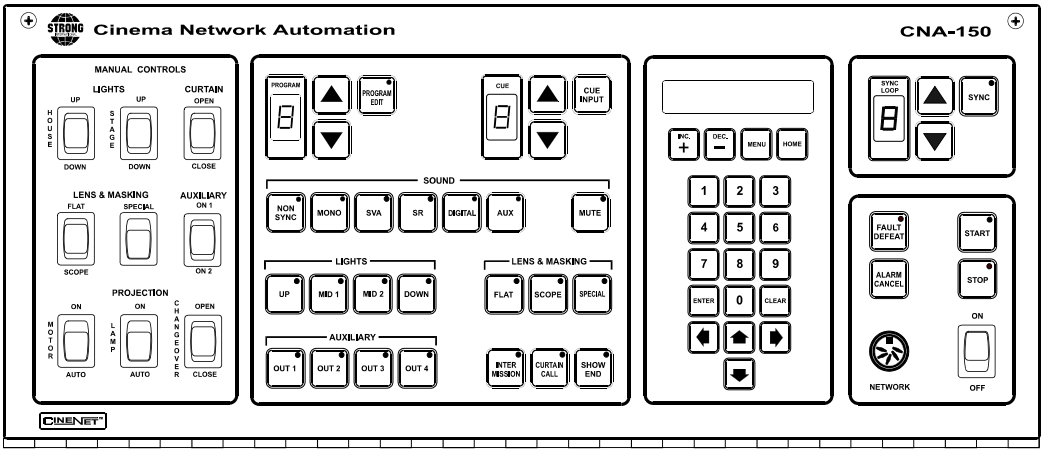

Figure 1

Program Number

Displays the program number to run or edit. Use the up and down cursor keys to select the program number. Up to nine unique programs can be saved.

Cue Number

Displays the show cue number. During programming use the up and down cursor keys to select the cue number to edit. Up to nine cues can be programmed for a show.

Programming Keys

These keys are used to program the sound, lens, masking, lights, intermission, curtain call and end of show. LEDs are on each key. The LED is "on" indicating the present state of the output during a show.

Program Edit Key

This key is used to enter the program edit mode allowing the user to build new or alter existing programs. The LED is on when "program edit" is active. The user may edit any program during a show or between shows.

Start Key

This key is used to start or restart a show. The LED on the start key will "blink" when the show is *ready to start* or *ready to restart*. The LED is "on" when the show is running, and "off" when the show is stopped.

Stop Key

This key is used to stop a show. The LED on the stop switch is "on" when a show is stopped, due either to a "local" or "remote" stop input or a fault.

Sync Key

This key is used to activate the automation for synchronous (interlock) operation. The sync LED will be "on" indicating the automation is in sync mode.

Sync Loop Number

This displays the Sync Loop number. Use the up and down cursor keys to change the loop number. Up to 9 different loops can be on the sync network. 0 disables the machine from sync operation. The user is prevented from changing the Sync Loop number when sync is enabled with the Sync Key.

Power Switch

Supplies power to the automation main controller and termination panels.

Fault Defeat Key

This key will defeat or bypass the fault inputs (film presence, film motion and xenon lamp). This key is normally used for testing the projection equipment or newly edited programs. It is *not* recommended for normal operation. The LED will "blink" when the Fault Defeat is activated.

Alarm Cancel Key

This key will cancel the local alarm and all remote alarms. This key is also used to clear any of the latched faults. Pressing the Alarm Cancel key once will cancel the alarm. Pressing the key again will clear the fault condition.

Cue Input Key

This key provides a manual cue input. This is similar to the cue input from the electronic cue detector or pick off. This key is always active during a show.

Numeric Keypad and Display

The keys and display are used to setup system parameters and view diagnostic and run-time status. The display also indicates local and remote faults.

Termination Panels

The eCNA Control Panel currently supports two types of termination systems. The type used depends on the specific requirements of the projection booth designers.

The **Dual** termination system consist of two panels that support all standard console and booth equipment control I/O. The functions are logically divided between the two boards according to the location of the projection booth equipment. The *Console* termination panel controls the equipment that is normally associated with the console system such as the projector, lamp, film monitoring, etc. The *Booth* termination panel controls other functions such as masking, curtains and lights. The Dual termination system is flexible in that it allows the Booth termination panel to be located in a place other than the console.

The **Single** termination system combines most of the functions of the Console and Booth Panels into a single panel. This panel provides an option of a single lower cost board for installations that do not need the functions on separate boards.

Dual Termination Panels

Console Termination Panel

This panel supports the input and output termination interface and provides connections for standard console functions as listed below:

Outputs:

- Projector Motor; On/Off
- Xenon Lamp; On/Off
- Changeover; Open/Close
- Lens Turret; Flat/Scope/Special
- Slide Projector; On/Off

Inputs:

- Film Presence
- Film Motion
- Film Tension
- Cue Input
- Xenon Fault

Features:

- High power *dry* relay contact outputs.
- High power override connector for plug-in cable to override switches.
- Projector motor fuse.
- Plug-in I/O CPU Control Board to handle I/O and serial interface.
- Terminal Blocks for connection to the console equipment.

The relays and I/O CPU Control Board get their power from the network cable. The Control Board will plug onto the relay board to provide the I/O and network interface.

Booth Termination Panel

This panel provides the outputs to control the following functions:

Outputs:

- Top Masking; Flat/Scope/Special
- Side Masking; Flat/Scope/Special
- Curtains; Open/Close
- House Lights; Up, Down, Mid 1, Mid 2
- Stage Lights; Up, Down
- Environment; On/Off
- Slide Projector; On/Off
- Sound Processor; Mono, SVA, SR, Digital 1, Aux, Nonsync

Inputs:

- Remote Start
- Remote Stop/Fire Stop

Features:

- Low power dry relay contact outputs.
- High power dry relay contact outputs for Slide Projector and Environment Control
- A plug-in I/O CPU Control Board to handle I/O and serial interface.
- Override connector for plug-in cable to override switches.
- Override connector for optional override switches.
- Large terminal blocks for user interface.

This Panel (PC board) will connect to the to the Local I/O Network (LIN). The outputs can be configured at the PC Host.

The relays and plug-in I/O CPU Control Board get their power from the LIN cable. This board will generally be mounted in a cabinet on the booth wall, but can also be mounted in the console.

Single Termination Panel

This panel combines most of the functions of the Console and Booth Terminal Panels. The connections and functions are listed below:

Outputs:

- Projector Motor; On/Off
- Xenon Lamp; On/Off
- Changeover; Open/Close
- Lens Turret; Flat/Scope/Special
- Slide Projector; On/Off
- Masking; Flat/Scope/Special
- Curtains; Open/Close
- House Lights; Up, Down, Mid 1, Mid 2
- Stage Lights; Up, Down
- Sound Processor; Mono, SVA, SR, Digital, Aux, Nonsync, Mute

Inputs:

- Film Presence
- Film Motion
- Film Tension/Remote Stop
- Cue Input
- Xenon Fault

Features:

- Low power *dry* relay contact outputs.
- High power *dry* relay contact outputs.
- Override connectors for plug-in cable to override switches.
- Projector motor fuse.
- Changeover fuse.
- Plug-in I/O CPU Control Board to handle I/O and serial interface.
- Terminal Blocks for connection to the console and booth equipment.

The relays and I/O CPU Control Board get their power from the network cable. The Control Board will plug onto the relay board to provide the I/O and network interface.

DIP Switch Settings

The LSN can support up to 64 devices (eCNA-100s, CNA-150s, eCNa-150's eCNA-200s, Remote Status Monitors and Host Computer). **Each device will each require a unique Sync Id number.** Id 0 is reserved for the *Host PC* and Ids 1 through 63 are assigned to eCNA-150s and other devices as necessary. To keep things simple, assign the eCNA-150 Ids starting at 1, corresponding to the house number and working up. The Remote Monitor's Ids, if used, should be assigned to the higher numbers starting at 62 and working down. You may want to keep Id 63 reserved for the portable or *secondary* host.

To set the Id number, first locate the eight position dip switch designated S1. See figure 2.5.

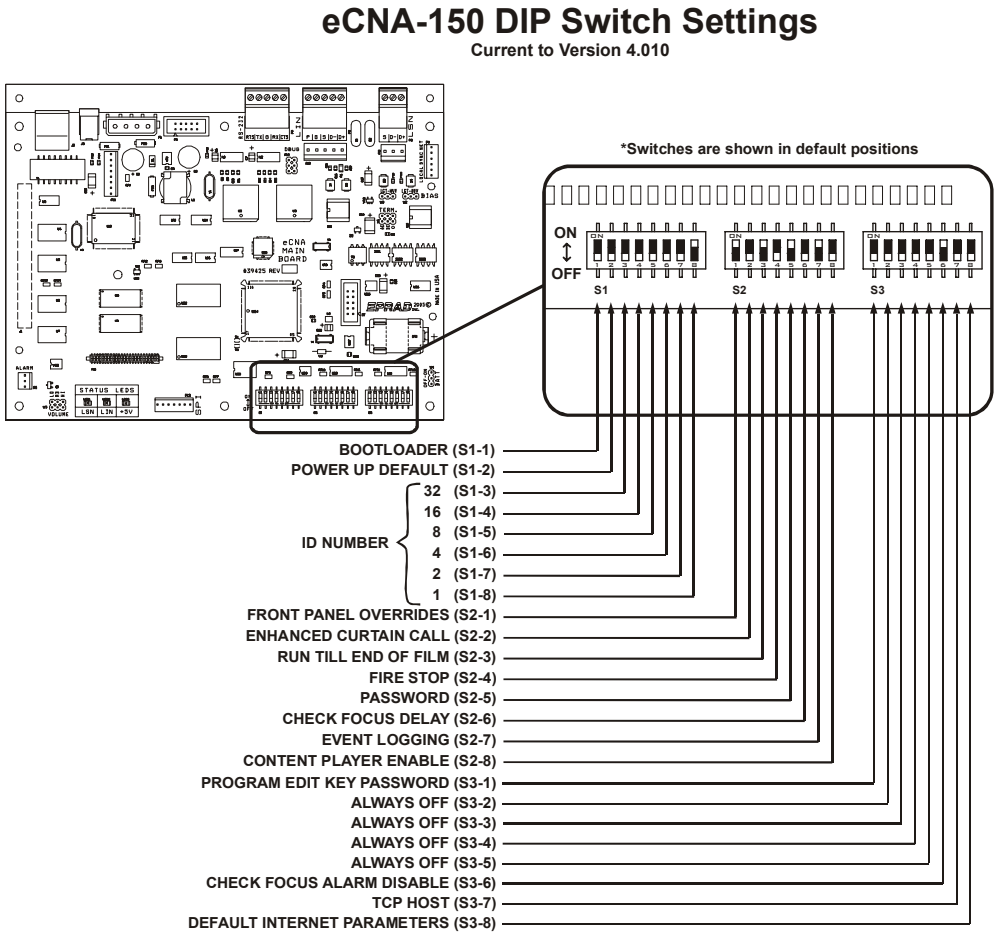

Figure 2

Switch Definitions

S1-1 BootLoader

On : Force Bootloader.
Off : Normal Use. (Factory Default)

S1-2 Supervisory Defaults

On : Force "Supervisory Defaults" on power up. Default Supervisory data will be restored on each power up.
Off : Will not overwrite user-programmed supervisory data on power up. If you change any of the default settings with the Host program this switch must be off or the next time the eCNA-150 is powered up all user settings will be over-written with the defaults. (Factory Default)

S1-3 through **S1-8** are used to set the **ID number**. The number is represented as a 6-bit binary number which allows for 64 possible ID numbers (0-63). Do not use 0 (zero) as an ID number. It has been reserved for the PC Gateway Interface. Each bit (switch) has a decimal value. Add up the decimal values to get the ID number. For example, ID number 15 would be 8+4+2+1=15 or a DIP switch setting of 001111.

S1-3 On : 1 Decimal value = 32
Off : 0 Decimal value = 0 (Factory Default)

S1-4 On : 1 Decimal value = 16
Off : 0 Decimal value = 0 (Factory Default)

S1-5 On : 1 Decimal value = 8
Off : 0 Decimal value = 0 (Factory Default)

S1-6 On : 1 Decimal value = 4
Off : 0 Decimal value = 0 (Factory Default)

S1-7 On : 1 Decimal value = 2
Off : 0 Decimal value = 0 (Factory Default)

S1-8 On : 1 Decimal value = 1 (Factory Default)
Off : 0 Decimal value = 0

Use figure 3 to configure the Id number with switches S1-3 through S1-8.

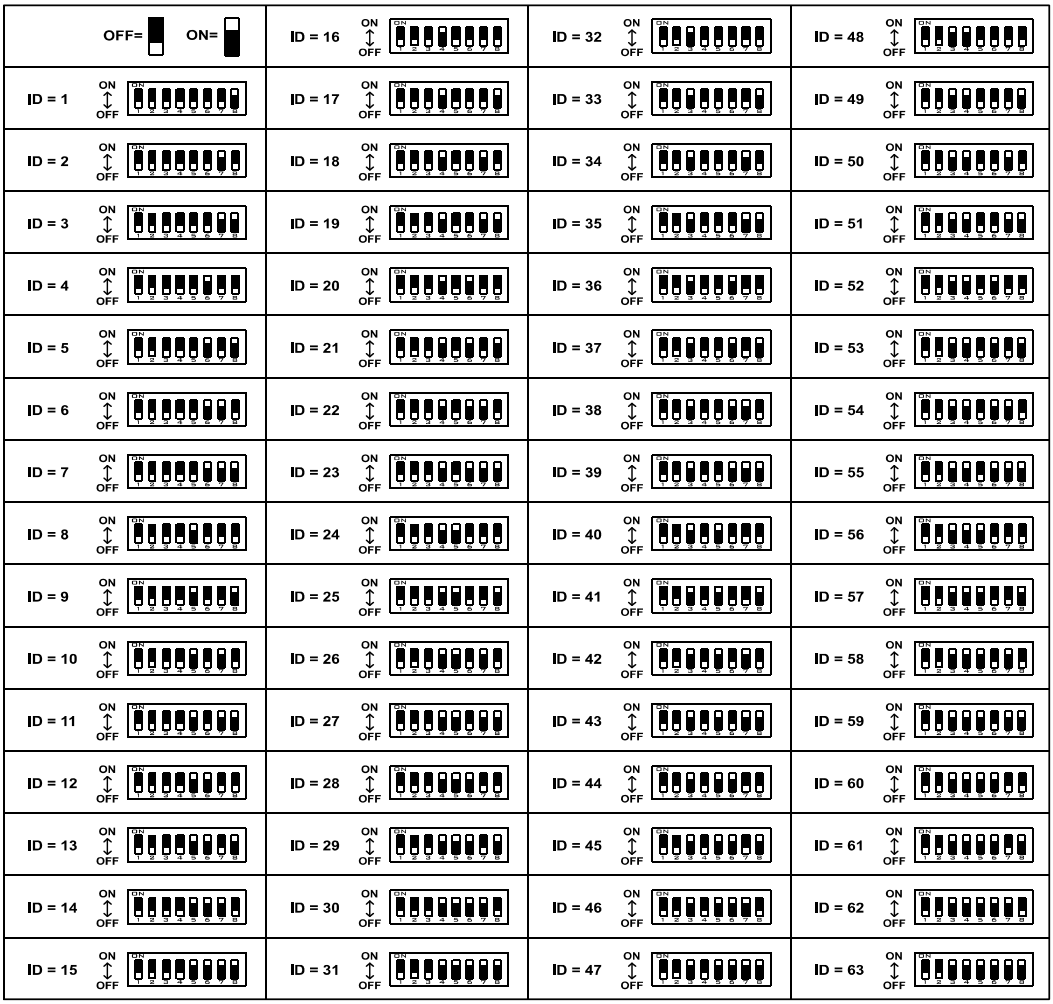

Figure 3

S2-1 Front Panel Overrides

On : Enable **front panel overrides**. The Sound, Lights, Lens/Masking and Auxiliary front panel switches will override the outputs without affecting the program. The next instruction will override any manual changes. (Factory Default)

Off : Disable front panel overrides. The Sound, Lights, Lens/Masking and Auxiliary front panel switches are only used for programming.

S2-2 Curtain Call

On : Enables the **Curtain Call** function and overrides the original Curtain Call function. Place the Curtain Call cue at a distance before the next cue that is equal to the curtain close time. When the eCNA-150 sees the Curtain Call cue, the curtains begin to close, the changeover closes and sound is muted. At the next cue, the curtains will begin to open. After the CURTAIN CLOSE TIMER counts down to zero, the curtain will be fully open and the changeover will open and the sound is selected.

Off : Original Curtain Call function. (Factory Default)

S2-3 Run Til' End of Film

On : Enables the **"Run til End of Film"** function. This overrides the normal 7 second motor off delay. The projector motor will run until the film runs out of the failsafe. (Factory Default)
Off : Disables the "Run til End of Film" function. The projector motor will shut off after the normal 7 second delay.

S2-4 Firestop

On : Enables the **"Fire Stop"** function.

39331 Booth Termination Board - Converts the Remote Stop input to a Fire Stop input and the Slide Projector relay (K13) to a Fire Stop output. Fire Stop *acts* like a Remote Stop with the following exceptions:
- Sound is Muted.
- Slide Projector on 39330 *Console Termination Board* is turned off *or* held off.
- K13 relay (Slide Projector) on Booth Termination board is turned on.

39332 Termination Board - Remote Stop input must be enabled on board. (W1-OPT1 jumper across pins 2 and 3 changes the Film Tension input to a Remote Stop input.) Converts the Remote Stop input to a Fire Stop input. Fire Stop *acts* like a Remote Stop with the following exceptions:
- Sound is Muted.
- Slide Projector is turned off *or* held off.

Off : Disables the "Fire Stop" function. (Factory Default)

S2-5 Password

On : Requires use of the **password** to **access** many of the functions. (Factory Default)
Off : Disables the password. No password is required to access the functions.
This switch can be software overridden using the latest version of host software.

S2-6 Check Focus Delay

On : Enables the "Check Focus Delay" function. In Clock Start or Timed Start the alarm will sound prior to the show starting.
Off : Disables the "Check Focus Delay" function. (Factory Default)

The Check Focus feature alerts the operator that the show is about to start. In Timed Start the alarm will begin to sound 7 seconds prior to the show starting. This gives the operator time to make any quick adjustments and to insure the image on the screen is in focus.

S2-7 Event Logging

On : Enabled - Events are sent to the Host computer. (Factory Default)
Off : Disabled - Events are not sent to the Host computer.

S2-8 Content Player

On : Enable
Off : Disable (Factory Default)
This switch allows the eCNA to interact with a digital content player. Serial commands exchanged between the content player and CNA automation allows the digital projector and film projector to share the screen in a coordinated manner
** See CAI user Guide*

S3-1 Program Edit Key Password

On : Enable (Password required to edit but not to view programs)
Off : Disable (No password required for program edit) (Factory Default)
"View only" mode indicated by Program Edit LED Flashing

S3-2 to 3-5 Always Off (Undefined)

S3-6 RCM/RSM-10 "Check Focus Alarm"

On : Enable the RSM/RCM-10 Alarm (Factory Default)
Off : Disable the RSM/RCM-10 Alarm
Allows Unit to Sound alarm at the RSM 10 before the beginning of a presentation reminding operator to make any final focus adjustments.

S3-7 TCP Host

On : TCP host routing enabled
Off : LSN Host routing enabled (Factory Default)
Sets eCNA to communicate with HOST computer via Ethernet or LSN Networking.

S3-8 Default internet parameters

On : Default parameters used TCP/IP
Off : User parameters used for TCP/IP
This switch disables user defined EEPROM parameters and enables default IP of 192.168.0.254 and half duplex communication.

TCP/ IP (Ethernet) Configuration

The eCNA-150 will need to be configured in order to assist other devices in interfacing with it via ethernet. Configuration is accomplished either with the "Dumb-Terminal" P8, RS-232 port on the eCNA-150's mainboard, or the Ethernet RJ45 connection. The installer will need to configure the IP, Default gateway, and the subnet mask. The eCNA's Hardware or MAC address is also configurable during setup.

RS-232 IP Configuration

The installer can use a windows PC or Laptop running a terminal emulator or any other device with dumb-terminal capabilities and a RS-232 communications port. Settings are as follows: 19,200 Baud, 8 Data bits, No-Parity, 1 stop-bit, and hardware handshaking. With power off, connect the cable from your terminal to P8, upon power up the terminal should come up with the configuration screen shown below, this is the eCNA's Ethernet configuration menu.
Any selections made using this method are stored in the eCNA's non-volatile EEPROM memory and will remain until changed by the user.
Note: a DIP switch is provided on the mainboard to select a factory default configuration for the ethernet communications port. These settings are as follows:

IP: 192.168.0.254
Half Duplex

It should be noted here that the Host software can communicate via either the LSN or Ethernet with the CineSuite software package.

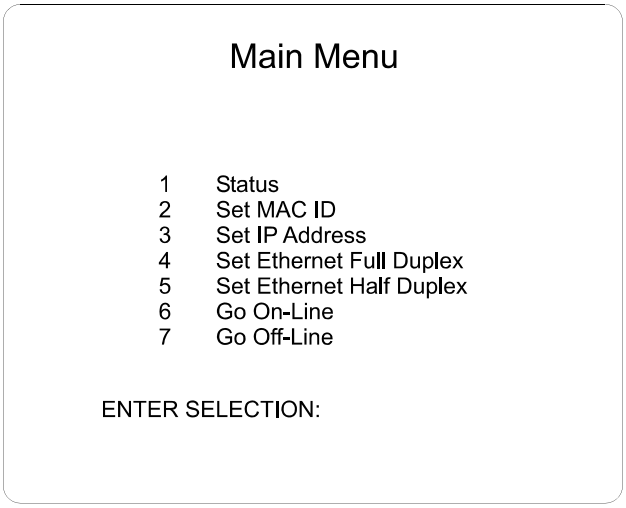

Figure 4: eCNA TCP/IP Setup screen

This is a listing of the menu items encountered while setting up the eCNA's IP address and networking options through the RS-232 interface.

```
Main Menu

1 Status
2 Set MAC ID
3 Set Ethernet Full Duplex
4 Set Ethernet Half Duplex
5 Set CNA IP Address
6 Set Subnet Mask
7 Set Gateway IP Address
8 Go On-Line
9 Go Off-Line

ENTER SELECTION: _
```

Selection 1

```
CNA-150 1.040
Status:
MAC ID: dd-dd-dd-dd-dd-dd
Mode: Full Duplex
CNA IP Address:   192.168.001.000
Subnet Mask:   255.255.255.000
Gateway IP: 000.000.000.000
CAI:        On-Line
```

Selection 2

```
MAC ID(dd-dd-dd-dd-dd-dd):
```

Selection 3

```
Setting Full Duplex
<<<You must cycle power to activate this new parameter.>>>
Press any key to continue_
```

Selection 4

```
Setting Half Duplex
<<<You must cycle power to activate this new parameter.>>>
Press any key to continue_
```

Function 5

```
CNA IP Address(192.168.000.000):
```

Function 6

```
Subnet Mask(255.255.255.000):
```

Function 7

```
Gateway IP(000.000.000.000):
```

Function 8

```
Setting On Line
```

Function 9

```
Setting Off Line
```

HTML Network Configuration

Ethernet settings can be configured via your web browser when the eCNA is connected to your LAN (Local Area Network). This option provides a means for configuring the IP, Subnet mask, and Gateway IP only at this time. A computer on the same local network can access the configuration/ status page when the eCNA's IP address is known and entered in the web browser's address bar:

Figure 5

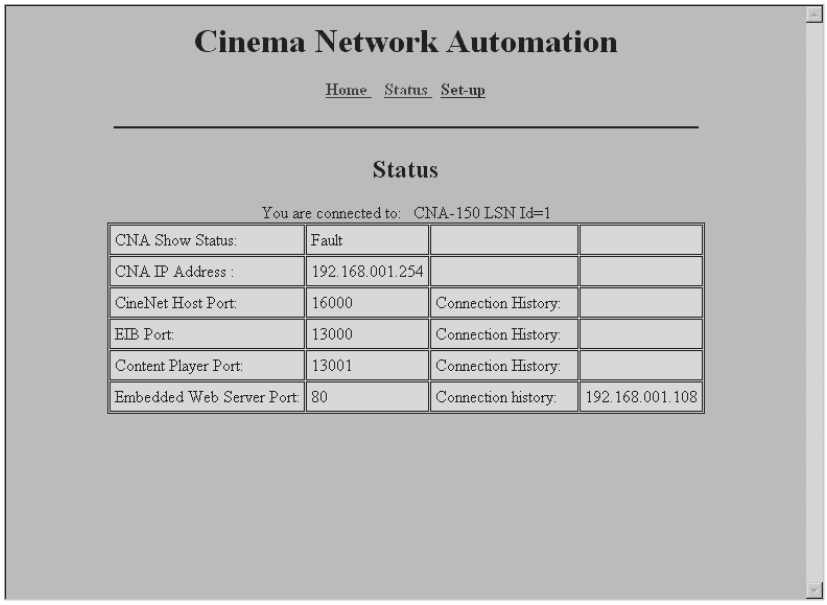

Figure 6

Embedded HTML server shown, IP address browser entry directs user to a welcome screen with hyperlink selections. The second illustration is the status page showing various network parameters.

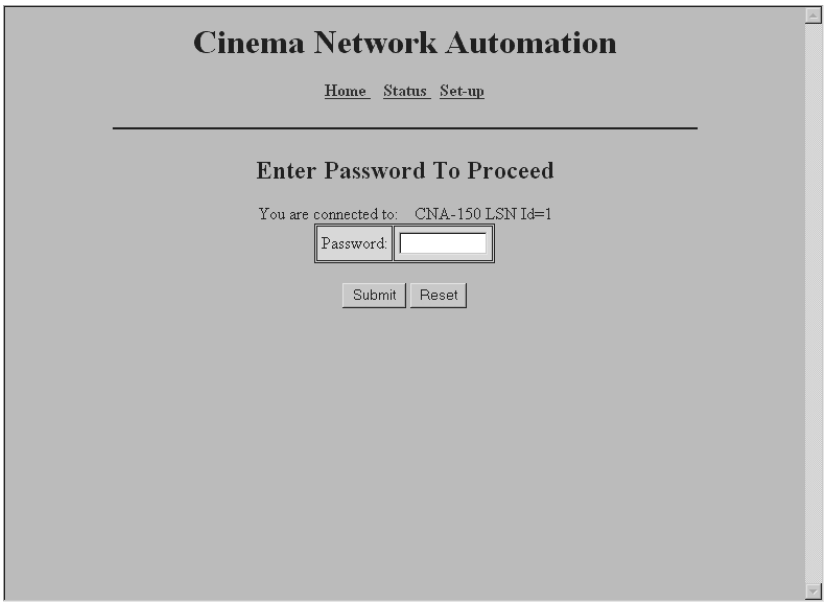

Figure 7

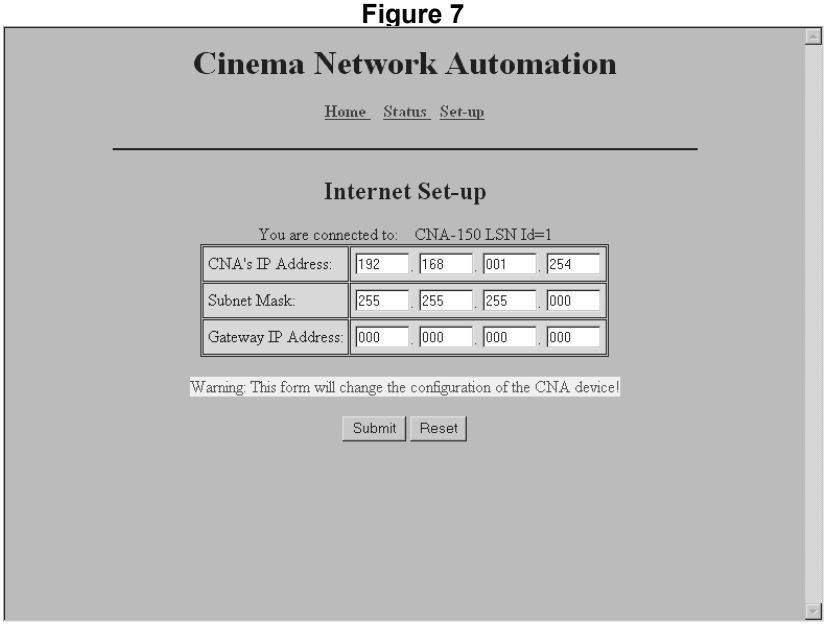

Figure 8

The above windows show the password login screen for the IP configuration page and the configuration page itself. A non-configurable password is used to access the IP settings where changes can be made to the device IP, subnet mask, and gateway IP address. The user is prompted to reboot the eCNA when changes are submitted.

Interface Hardware

The illustration below shows the location of the Ethernet (10Base-T, RJ45, cat5 termination, Etc...)TCP/IP Connector. Also shown is the P8 (RS-232) header used for configuration of the TCP/ IP network settings. In order to use the terminal connection an adaptor cable is required to plug into the 10 pin header and interface with a standard PC RS-232 serial port.

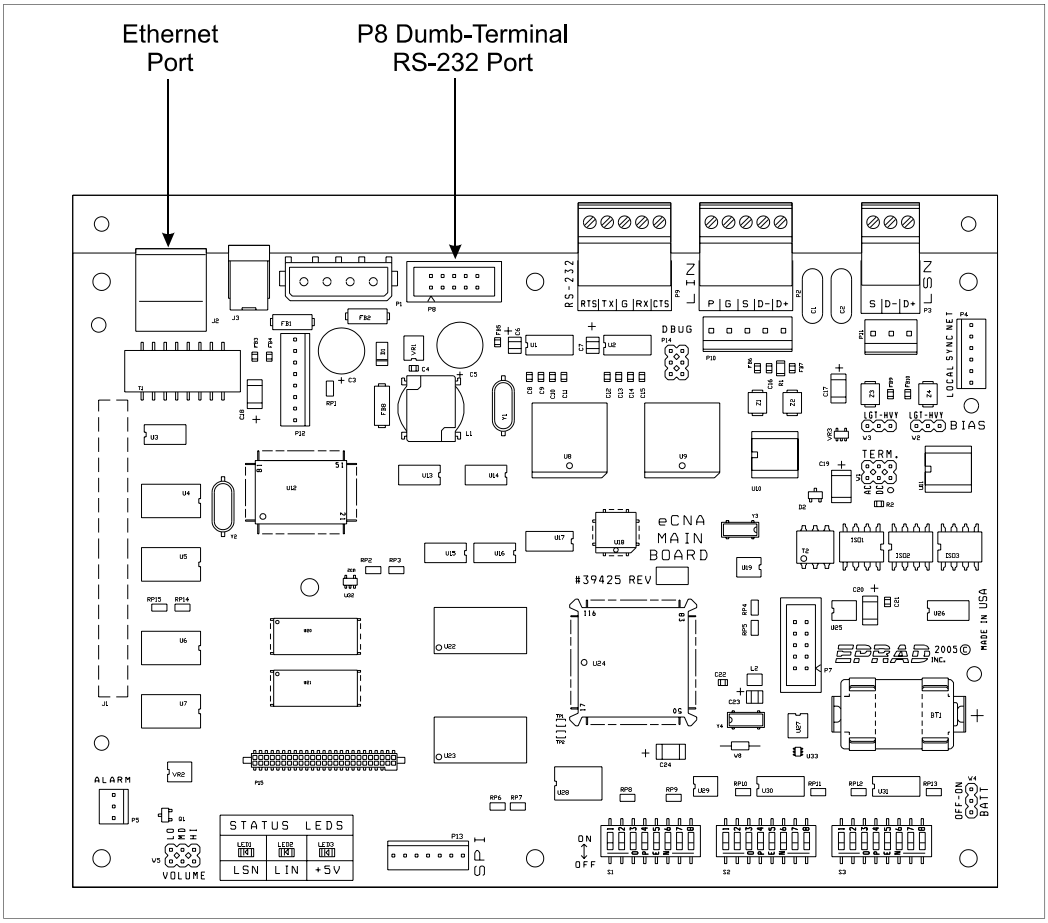

Figure 9

Ethernet Connection Hardware

The eCNA's ethernet port is of the 10BaseT variety, this means that it communicates at a maximum of 10MB/s. This makes it a natural requirement that the hardware path support this speed. The cable should be of the standard Cat5 type and terminate in RJ45 connections. Twisted pair wiring is used and should follow standard conventions for ethernet hardware. Below is a diagram representing the wiring terminations that should be used.

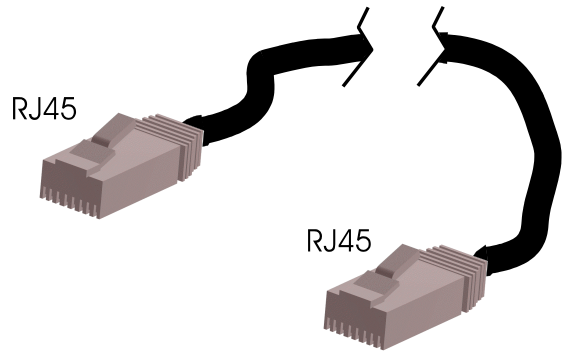

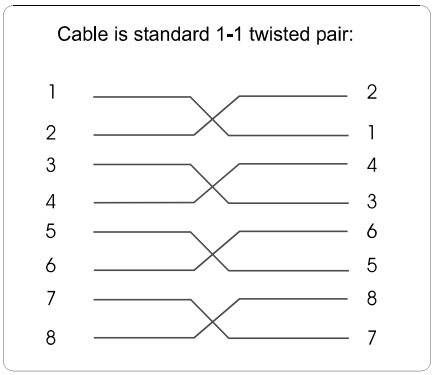

The hub, switch or router used with your network must also be configured to accept 10MB/s network traffic. Most hardware manufactured today accepts, and in many cases automatically configures itself to either 10, 100, or 1000 MB/s. Some older hardware requires a switch to be manually set to the proper network speed.

A simplified wiring connection can also be used, the above cable is a standard store bought ethernet cable, it may be desirable to wire only the necessary contacts when terminating your own connections. The critical connections are shown in the diagram to the right.

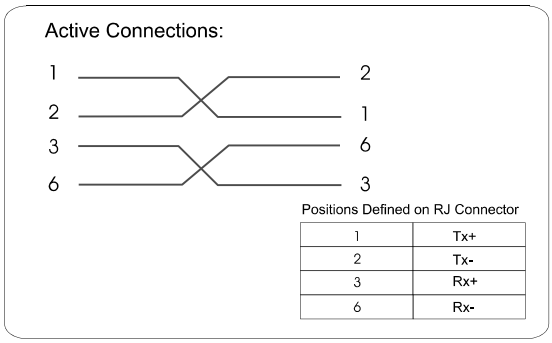

Some users may find it necessary to connect their eCNA directly to their host computer using the ethernet port. In this case a special cable known as a crossover cable must be used. Most hubs and switches have automatic crossover in them eliminating the need for such a cable, however in the case of a direct eCNA to PC connection the crossover must be hard-wired. The diagram to the right shows the crossover connection.

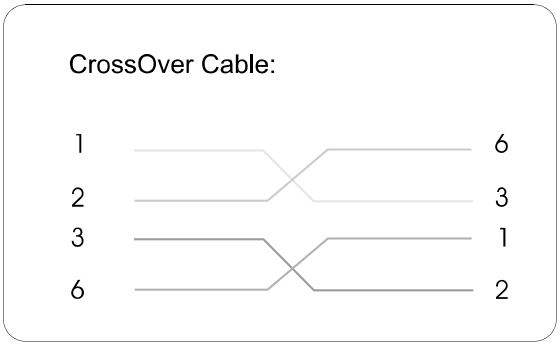

TCP/ IP Networking Overview

The eCNA should be "behind" your router and plugged into a hub or switch. It is beyond the scope of this manual to intimately describe the details of computer networking. The configuration suggestions given should be basic to anyone with knowledge of common local or wide area networking practices and hardware.

The eCNA is not configurable for DHCP addressing as of the writing of this manual, therefore a "Static IP" must be used. The main router with hub or switch connected or integrated can be set for either DHCP or static IP. Static IP requires that every device, computers, etc... behind the router, be configured for a static IP. This address will not change and every time the Router, computer or eCNA is rebooted, the network's hardware devices use the same address.

The other option for your router is DHCP (Dynamic Host Configuration Protocol). This will allow any computer or DHCP enabled device plugged into your router (acting as a DHCP server) to gain an IP address and network access. IF your network is using DHCP and you know the range of IPs used by the DHCP server, the eCNA can be used if the server is configured to accept it outside of that range of numbers. The server must however, never assign the eCNA's address to any other device. This situation would cause a duplicate IP conflict and require intervention. Most DHCP software allows IP range limiting and static addressing.

Another alternative to the router-PC-eCNA configuration is to use a dedicated local "intranet" with a server taking the place of a hardware router configured to communicate with the eCNA. The entire local network can then be run from a single PC and switch centrally located and accessible only by supervisors and administrators.

Below are two very basic examples of possible network designs. The first shows eCNAs connected behind a router/ switch/ hardware firewall. The host PC can be configured to utilize the internet via the router's uplink, the decision to do so is up to the administrator and recommended only if actually necessary. The Host PC can then be used for everyday tasks like email and web-browsing.

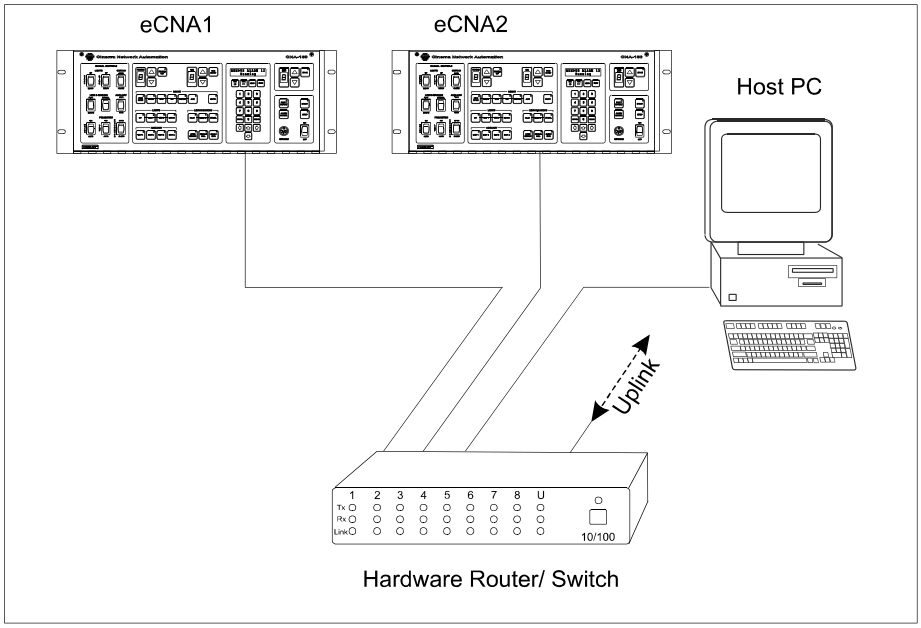
eCNA1
eCNA2
Host PC
Uplink
1 2 3 4 5 6 7 8 U
Tx
Rx
Link
10/100
Hardware Router/ Switch

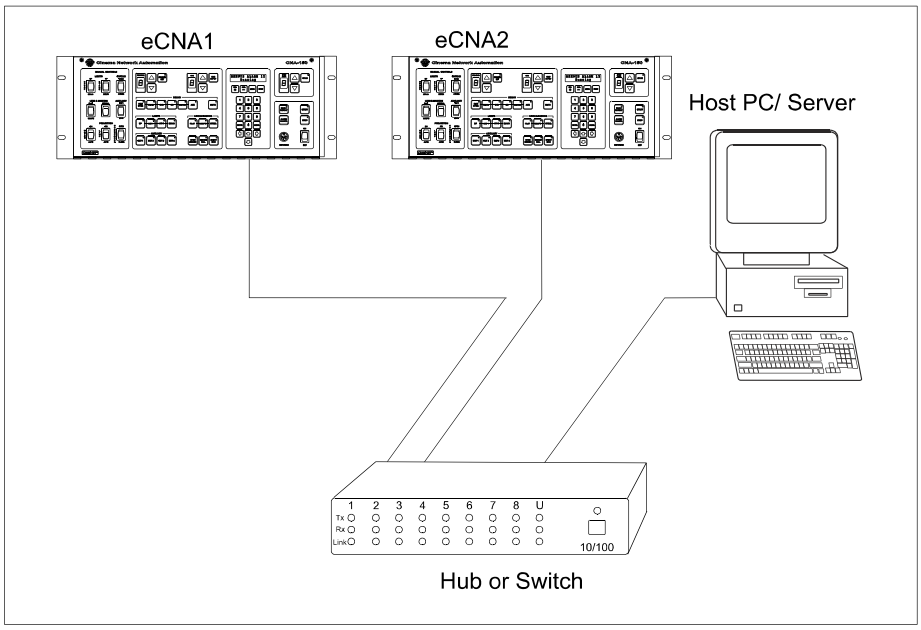
eCNA1
eCNA2
Host PC/ Server
1 2 3 4 5 6 7 8 U
Tx
Rx
Link
10/100
Hub or Switch

Figure 10

Alarm Loudness setting

The alarm loudness can be set for one of three intensities; LOW (87 dBA), MEDIUM (94 dBA), HIGH (98 dBA). See figure 2.7 below.

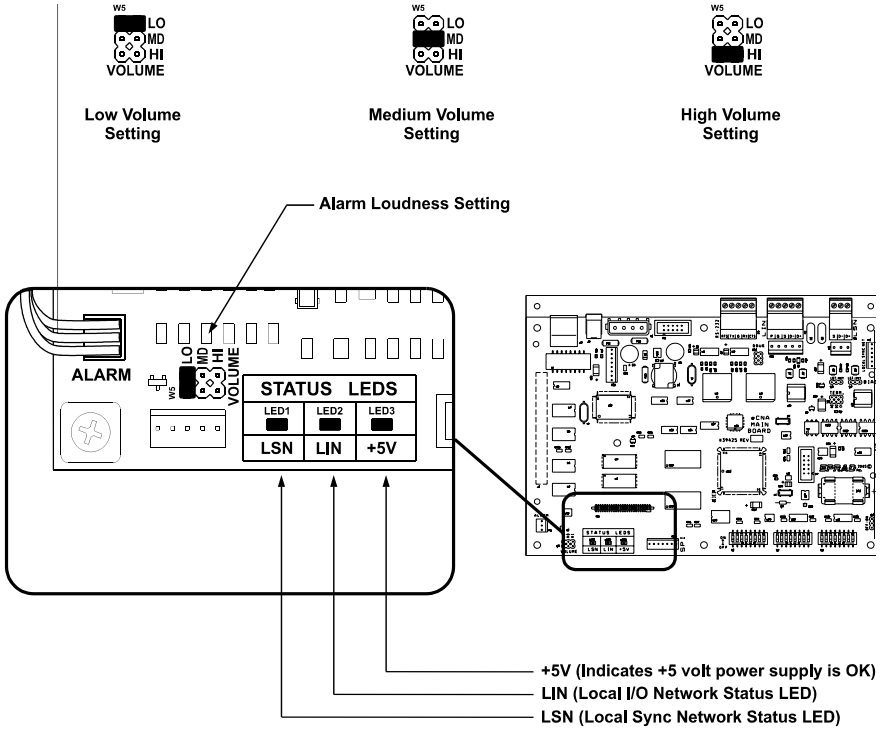

Figure 11

Status LEDs

There are three status LEDs on the 39425 Main CPU Board. These indicate the status of the +5 volt power supply, the LSN and the LIN. Following are the three conditions for the LIN and LSN LEDs:

Fast Blinking Rate: The eCNA-150 computer is working and is communicating properly.

Slow Blinking Rate: The eCNA-150 computer is working, but is *not* communicating.

Off: The eCNA-150 computer has a problem.

Checking the Network

Once the eCNAs are completely installed, it will be necessary to verify that all eCNAs, Termination Panels, and any other CINENET™ devices are communicating properly on their networks. The eCNA-150 features two network status screens that display all devices on both the LSN and LIN networks.

From the eCNA-150 front panel press: [MENU][2][1]. This is the LSN Status screen. This screen allows you to see all eCNAs, Remote Monitors and Host PCs on the network. The first screen shows Ids 0 through 4 and the Sync Loop number for each.

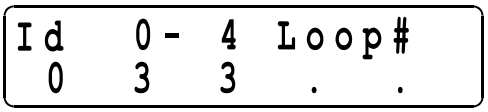

The bottom line of the display shows the Sync Loop numbers for each Id. For example, if the bottom line shows: **0 3 3 . .**, Id 0 is the Host computer, Ids 1 and 2 are on sync loop 3, and Ids 3 and 4 are not responding. Scroll down to see more Ids. The next screen will show Ids 5 through 9 and so forth. Sync loop "**0**" indicates that the eCNA is present and responding correctly, but is not enabled for sync. If a device (eCNA, Host, etc) is not showing a loop number, be sure the device is powered up and the Id is set correctly.

Next, verify the LIN devices by pressing [MENU][2][2]. This is the LIN Status screen. This displays all I/O devices detected by the eCNA and lists them in order of Id number. For example, the Console Termination Panel detected is Id number 1 and is running version 3 software, checksum 150.

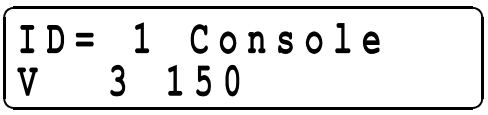

Following is a list of I/O devices currently supported by the eCNA-150.

ID=1	Console	:	Console Termination Panel #1
ID=2	Console	:	Console Termination Panel #2
ID=3	Booth	:	Booth Termination Panel
ID=4	Aux I/O	:	Auxiliary I/O Board #1
ID=5	Aux I/O	:	Auxiliary I/O Board #2
ID=6	Aux I/O	:	Auxiliary I/O Board #3
ID=7	Aux I/O	:	Auxiliary I/O Board #4
ID=8	MCD-35	:	Film Monitor and Cue Detector #1
ID=9	MCD-35	:	Film Monitor and Cue Detector #2
ID=10	ACP-50	:	Auxiliary Control Panel #1
ID=11	ACP-50	:	Auxiliary Control Panel #2
ID=12	RVC-10	:	Remote Volume Control (analog & digital)
ID=13	QDC-400	:	Quad Dimmer Control Board
ID=14	QDC-400	:	Quad Dimmer Control Board
ID=15	QDC-400	:	Quad Dimmer Control Board
ID=16	QDC-400	:	Quad Dimmer Control Board

Note: The Single Termination Panel P/N 39332 is reported as both a Console and Booth.

Section 2
SETUP

STOP - Please note at this point you should have completed the entire installation of the automation system. If you have not, go to the *Installation* section of the manual and complete it before proceeding.

Menu Structure

The eCNA-150 currently allows configuration and set-up of cue learn, timed start, local and remote copy functions, system timers and the QDC-400 dimmer control board. There are also LSN and LIN status screens that are useful for verifying network devices and diagnosing network problems. The set-up screens are broken down into menus and sub-menus that make it easy to locate the desired parameter. The structure of the eCNA-150 menu is shown below.

Main Run & Status Screen
- **Main Menu**
  - **1 Set-Up**
    - **1 Supervisory**
      - **1 eCNA System**
      - **2 Dimmer**
      - **3 Sound**
    - **2 Learn Times**
    - **3 Sound Programs**
  - **2 Network**
    - **1 LSN Status**
    - **2 LIN Status**
  - **3 Copy**
    - **1 Network Copy**
    - **2 Local Copy**
  - **4 Control**
    - **1 Start Mode**
    - **2 Cue Learn Mode**
    - **3 Sound Level**

The menu is expanded showing all items. The editable parameters shown are factory defaults.

Main Run & Status Screen
- **Main Menu**
  - **1 Set-Up**
    - **1 Supervisory**
      - **1 eCNA System**

Sound Changeover Delay (sec)	**7**
Lens Changeover Delay (sec)	**3**
Lens Changeover Pulse (sec)	**.2**
Failsafe Delay (sec)	**2**
Cue Factor Default	**.001**
Cue Learn Mode	**Manual**
Timed Start	**Disabled**
Check Cue Fault	**Disabled**
Missed Cue Fault	**Disabled**
Rem Stop Alarm Time (sec)	**10**

Password xxxx

2 Dimmer

Dimmer Ch1=House

Up 0% 0 sec
Down 0% 0 sec
Mid1 0% 0 sec
Mid2 0% 0 sec

Dimmer Ch2=Stage

Up 0% 0 sec
Down 0% 0 sec
Mid1 0% 0 sec
Mid2 0% 0 sec

Dimmer Ch3=None

Up 0% 0 sec
Down 0% 0 sec
Mid1 0% 0 sec
Mid2 0% 0 sec

Dimmer Ch4=None

Up 0% 0 sec
Down 0% 0 sec
Mid1 0% 0 sec
Mid2 0% 0 sec

3 Sound

RVC-5 Disabled/ Enabled
Output 1 Dolby CP65
Output 2 Dolby CP65

2 Learn Times

Program (1-9)
Cue 1 Time 0:00
Cue 2 Time 0:00
Cue 3 Time 0:00
Cue 4 Time 0:00
Cue 5 Time 0:00
Cue 6 Time 0:00
Cue 7 Time 0:00
Cue 8 Time 0:00
Cue 9 Time 0:00

3 Sound Programs

Program (1-9)
Cue 0 Level/Time x.xdB/ 0:x
Cue 1 Level/Time x.xdB/ 0:x
Cue 2 Level/Time x.xdB/ 0:x
Cue 3 Level/Time x.xdB/ 0:x
Cue 4 Level/Time x.xdB/ 0:x
Cue 5 Level/Time x.xdB/ 0:x
Cue 6 Level/Time x.xdB/ 0:x
Cue 7 Level/Time x.xdB/ 0:x
Cue 8 Level/Time x.xdB/ 0:x
Cue 9 Level/Time x.xdB/ 0:x

2 Network

1 LSN Status

Id 0- 4 Loop# . . . . .
Id 5- 9 Loop# . . . . .
Id 10-14 Loop# . . . . .
Id 15-19 Loop# . . . . .
Id 20-24 Loop# . . . . .
Id 25-29 Loop# . . . . .
Id 30-34 Loop# . . . . .

Id 35-39 Loop# . . . . .
Id 40-44 Loop# . . . . .
Id 45-49 Loop# . . . . .
Id 50-54 Loop# . . . . .
Id 55-59 Loop# . . . . .
Id 60-63 Loop# . . . .

2 LIN Status
ID=1 Console
ID=2 Console
ID=3 Booth
ID=4 Aux I/O
ID=5 Aux I/O
ID=6 Aux I/O
ID=7 Aux I/O
ID=8 MCD-35
ID=9 MCD-35
ID=10 ACP-50
ID=11 ACP-50
ID=12 RVC-10
ID=13 QDC-400
ID=14 QDC-400
ID=15 QDC-400
ID=16 QDC-400

3 Copy
1 Network Copy
Type of Data
Supervisory Data
Learn Times (1-9)
Program (1-9)
All Programs
2 Local Copy
Program (1-9, Default 1)

4 Control
1 Start Mode Manual
2 Cue Learn Mode Learn
3 Sound Level Enable/ Disable

All menu items are proceeded with a number. If you know the number of the menu item that you want to access, you may use only the number keys. For example, to access the Local Copy function from the main run screen press [3][2] and enter the password. Knowing the number sequence to the most frequently used functions can save considerable time.

Following are the number sequences to the most frequently used functions.

eCNA System	[MENU][1][1][1]	(Password Required)
Dimmer	[MENU][1][1][2]	(Password Required)
Learn Times	[MENU][1][2]	(Password Required)
LSN Status	[MENU][2][1]	
LIN Status	[MENU][2][2]	
Network Copy	[MENU][3][1]	(Password Required)
Local Copy	[MENU][3][2]	(Password Required)
Start Mode	[MENU][4][1]	
Cue Learn Mode	[MENU][4][2]	

Setup Supervisory

The first step in the setup procedure is to configure the eCNA-150 system parameters. Supervisory is used to customize the operation of the eCNA-150. The eCNA System menu contains a set of system parameters used to set system delays, timers, and other global attributes. The Dimmer menu allows configuration of the QDC-400 dimmer.

eCNA System

The list below summarizes the eCNA System functions. Defaults are shown.

Sound Changeover Delay (sec)	**7**
Lens Changeover Delay (sec)	**8**
Lens Changeover Pulse (sec)	**.2**
Failsafe Delay (sec)	**1**
Cue Factor Default	**.001**
Cue Learn Mode	**Manual**
Timed Start	**Disabled**
Check Cue Fault	**Disabled**
Missed Cue Fault	**Disabled**
Remote Stop Alarm Time (sec)	**30**

Output Configuration can only be changed from the Host program. The relay output defaults are shown in the table below.

Output	Contacts	Power-up	Fault-to
Lens:	**Pulsed**	**No-op**	**No-op**
Masking:	**Pulsed**	**No-op**	**No-op**
Sound:	**Pulsed**	**Non-sync**	**Non-sync**
House Lights:	**Pulsed**	**Up**	**Up**
Stage Lights:	**Pulsed**	**Up**	**Up**
Curtain:	**Pulsed**	**None**	**No-op**
Slide Projector:	**Maintained**	**On**	**On**
Out 1:	**Pulsed**	**No-op**	**No-op**
Out 2:	**Pulsed**	**No-op**	**No-op**
Out 3:	**Maintained**	**No-op**	**No-op**
Out 4:	**Maintained**	**No-op**	**No-op**

To enter eCNA System , press [MENU][1][1][1]. At this point you will need to enter the password.

Sound Changeover Delay

The sound changeover delay determines the delay time between the show start input and the sound changeover from the *non-sync* music source.

For example, with the Sound C/O Delay set at 7, seven seconds after the show starts the changeover will open. And seven seconds after the last (end of show) cue is encountered the changeover will close. The legal range is 3 to 59 seconds. Enter data with the number keys.

Lens Changeover Delay

This represents the time required for the lens turret to change positions from flat to scope. It is the time the changeover will remain closed during lens changes. The result is a black screen. To determine the desired value, simply time the lens turret and add 1 second. The legal range is 0 to 9 seconds. 0 disables the function. Enter data with the number keys.

Lens Changeover Pulse

This setting controls the duration or width of the pulse sent to the changeover. It is recommended that the Changeover Pulse be set to the minimum value that allows the changeover to complete its full stroke. The legal values are .1 to 1.0 seconds. Enter data with the number keys.

Failsafe Delay

This function is a film *bobble* delay designed to prevent premature shutdown caused by platter or other types of rewind and film transport equipment during startup or any other portion of the presentation. Anytime the failsafe does not sense film presence during a presentation the Failsafe Delay timer is started, if film is detected before the timer expires, the presentation is not shutdown. If, however, film is not detected before the timer expires, the presentation is stopped and the alarm will sound. Legal entries range from 1 to 10 seconds. Enter data with the number keys.

Cue Factor Default

This function is used in conjunction with eCNA-150 *Cue Learn* system. The system learns the cue locations the first time a presentation is shown and places a "window", based on the Cue Factor number. In the event of a missed cue, the

eCNA-150 maintains the proper timing of events by automatically inserting a cue at the end of the window.

Simply put, the cue window time is the *Cue Factor* multiplied by the *Cue Time*. For example, if The Cue Factor Default is .001 and the cue occurs 50 minutes into the presentation, the size of the window is: .001 X 50 = .05 minutes or (.05 X 60) 3 seconds. Remember, the time of each window is based on the distance the cue is from the beginning of the film. So it follows that the further the cue is from the beginning of the film, the larger the window will be. Based on this, select a Cue Factor you can live with. For an average length movie, a Cue Factor Default setting of .002 is good.

Legal range is .001 to .999.

Note: For more information see *Cue Window Factor* see Cue Learn Mode in Section 4.

Cue Learn Mode

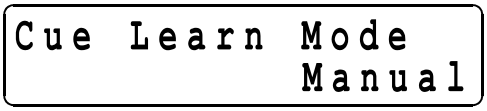

This setting allows the Cue Learn Mode to be *manually* or *automatically* terminated at the end of the first presentation or *disabled*. In the Manual mode the operator is required to manually de-activate the Cue Learn Mode by pressing the Learn Mode key after the first presentation is completed. In the Auto mode the eCNA-150 assumes that all cues were in their proper location and the presentation went as planned. At the end of the first presentation the eCNA-150 will automatically de-activate the Cue Learn Mode. When Cue Learn Mode is disabled the operator is prevented from activating the "learned" mode. The entries are **Auto, Manual** and **Disabled**. Select the message with the [+] and [-] keys.

Timed Start

This function controls access to the timed autostart function. The entries are **Enabled** and **Disabled**. When Timed Start is disabled the operator can not access the Time Start feature. Toggle the messages with the [+] and [-] keys.

Check Cue Fault

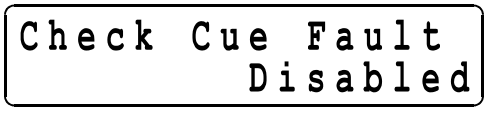

When using the system Cue Learn mode feature there is a fault message that is displayed after running the presentation in *Learn* mode. The message **"CHECK CUE TIMES"** is displayed as a reminder to the operator to verify the cue times after the first show. This message can be suppressed by setting it to Disabled. This message is also suppressed if Cue Learn Mode is set to Disabled. Toggle the message with the [+] and [-] keys. See *Cue Learn Mode* in Section 4.

Missed Cue Fault

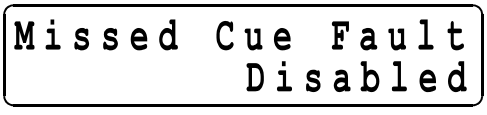

When using the system Cue Learn mode feature there is a fault message that is displayed after running the presentation in *Learned* mode. For example, the message **"MISSED CUE 3"** will be displayed if the system did not see cue foil 3 during the show. This message can be suppressed for those theatres that do not use cue foil on the film, or for some other reason do not want to see this fault message. Toggle the message with the [+] and [-] keys. See *Cue Learn Mode* in Section 4.

Remote Stop Alarm Time

```
Rem Stop Alarm
Time (sec)     30
```

This function serves as a remote network alarm. When set to a non-zero time the alarm will pulse (for the programmed time) if another eCNA automation on the network has faulted. Setting the time to 0 will disable this feature. Setting the time to 99 will sound the alarm until the alarm is canceled at the eCNA that caused the fault or a Remote Monitor.

Additional eCNA System Setup (Host Only)

Additional eCNA-150 parameters may be configured from the Host program. You must have a host computer running the CINENET™ Host program and the PCI-64 or PCI-64A Gateway Interface connected the LSN.
Relay outputs can be configured for pulsed or maintained, and fault-to and power-up conditions. You can also assign unused relays to the Out 1, Out 2, Out 3 and Out 4 controls. For example, if you are using the QDC-400 dimmer, there are 6 dimmer relays that will not be used. You may assign Out 1 to control the House Down relay and Out 2 to control the House Up relay. These outputs can then be programmed as part of a show. See the *Host Program Operators Manual* for further information.

```
                                                  8:08:32   2/11/2005  NET    80
                          Set-Up CNA-100/150 System
                                                                0 CURRENT RECORD
Record Name:  _           PROJ100                               1 RECORDS USED
                                                                1 TOTAL RECORDS
Sound C/O Delay (sec):    7
Lens C/O Time (sec):      8
ChangeOver Pulse (sec): 0.2
Failsafe Delay (sec):     1
Cue Factor Default:   0.001
Password:          Default 3141       Output     Contacts  Power-up  Fault-to
Cue Learn:         Manual           Lens:       Pulsed        No-op     None
Timed Start:       Disabled         Masking:    Pulsed        No-op     None
                                    Sound:      Pulsed        Non-sync  Non-sync
Check Cue Fault:   Disabled         H. Lights:  Pulsed        Up        Up
Missed Cue Fault:  Disabled         S. Lights:  Pulsed        Up        Up
                                    Curtain:    Pulsed        None      No-op
Time Format:       12Hr             Slide Proj: Maintained    On        On
Remote Stop Alarm (sec):  0         Out 1:      Pulsed        No-op     No-op
Out 1 Controls:    None             Out 2:      Pulsed        No-op     No-op
Out 2 Controls:    None             Out 3:      Maintained    No-op     No-op
Out 3 Controls:    None             Out 4:      Maintained    No-op     No-op
Out 4 Controls:    None

                                                                Esc=Menu
```

Setup Dimmer

The QDC-400 Dimmer Control Board is required for this procedure. The eCNA-150 and QDC-400 Dimmer Control board allow the user to configure lighting scenes in minutes.

Note: Before beginning be sure the QDC-400 Control board, dimmer power modules and lights are wired and tested.

Enter the dimmer set-up screens by pressing [MENU][1][2] (or by pressing [MENU][ENTER][▼][ENTER]). Enter the password to gain access.

```
      Dimmer
ENTER PASSWORD
```

The QDC-400 is a four channel dimmer and each channel must be appropriately set to either “House”, “Stage” or “None”. *Note: Any additional selections are only used for light show programs, which can only be programmed from the Host computer.* How these are configured will be determined by the physical wiring of the dimmer power modules and lights.

With the cursor on the channel field the press [+] or [-] keys to select the appropriate light zone. Repeat this for all channels and exit dimmer set-up to save zone data.

```
Dimmer Ch1=None
Up      0%   0 sec
```

Re-enter dimmer set-up by pressing [MENU][1][2].

But, before programming the levels and fade-in times you need to understand how the eCNA-150 controls the House and Stage light zones. There are four *House* light levels that can be programmed from the front panel: UP, MID 1, MID 2 and DOWN. The *Stage* lights operate with the House lights as follows:

When programmed for:	The lights do this:
UP	:House Lights UP; Stage Lights UP
MID 1	:House Lights MID 1; Stage Lights DOWN
MID 2	:House Lights MID 2
DOWN	:House Lights DOWN;Stage Lights DOWN

A typical program might look like the following example:

Movie:	Program:	Lights:
Intermission	:UP	:House UP; Stage UP
Previews	:MID 1	:House MID 1; Stage DOWN
Feature	:DOWN	:House DOWN; Stage DOWN
Credits	:MID 2	:House MID 2
Intermission	:UP	:House UP; Stage UP

Based on the example above you could program the levels as follows:

House UP	= 80%	10 seconds
House MID 1	= 40%	10 seconds
House MID 2	= 40%	10 seconds
House DOWN	= 10%	10 seconds
Stage UP	=100%	10 seconds
Stage DOWN	= 0%	10 seconds

Note: You can ignore the Stage MID 1 and MID 2 levels. The eCNA-150 does not currently use them.

See the *QDC-400 Dimmer Controller* manual for more detail on installing and setting up the dimmer.

Setup Learn Times

Each time a program is executed the computer stores each cue time in memory. If the eCNA-150 was in *cue learn mode* when the show ended the values for the cue times are saved to a table in *battery-backed* memory. The values in this table can be viewed and edited. A program can store up to nine cue times. Access is granted with the password. To access the cue times from the main screen, press [MENU][1][2] and enter the password.

Enter the program number you want to view and press [ENTER].

Now you are viewing the *cue learn times* for the program.

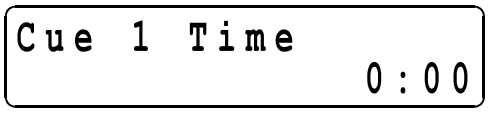

At this time you may enter or edit the cue learn times by using the number keys. Press the cursor keys or [ENTER] to move to different learn time fields. The learn times are displayed in minutes and seconds. The maximum value that can be entered is 999 minutes 59 seconds (equivalent to 16 hours 39 minutes and 59 seconds). Press the [CLEAR] key to reset the cue time to 0:00. Clear all cue times which are not being used. **Verify upon completion that all cue times are arranged in chronological ascending order.**

Network Status

The eCNA-150 features two network status screens that display all devices on both the LSN and LIN networks.

From the eCNA-150 front panel press: [MENU][2][1]. This is the LSN Status screen. This screen allows you to see all eCNAs, Remote Monitors and Host PCs on the network. The first screen shows Ids 0 through 4 and the Sync Loop number for each.

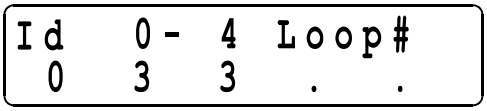

The bottom line of the display shows the Sync Loop numbers for each Id. For example, if the bottom line shows: **0 3 3 . .**, Id 0 is the Host computer, Ids 1 and 2 are on sync loop 3, and Ids 3 and 4 are not responding. Scroll down to see more Ids. The next screen will show Ids 5 through 9 and so forth. Sync loop "**0**" indicates that the eCNA is present and responding correctly, but is not enabled for sync.

Enter the LIN Status screen by pressing [MENU][2][2]. This displays all I/O devices detected by the eCNA and lists them in order of Id number. For example, the Console Termination Panel detected is Id number 1 and is running version 3 software, checksum 150.

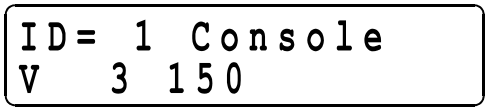

There are seven fault messages that can be displayed to indicate a problem. The messages are:

DevErr
Commerr
TimeOut
"CAI COM TIMEOUT"
"CP COM TIMEOUT"
"CP NOT IN AUTO"
"CP NOT READY"

"DevErr" indicates that the eCNA-150 does not recognize the remote device. This could be due to software version incompatibility. "CommErr" indicates that the remote device is not responding regularly. This could be due to a defective remote device or the wiring to it. "TimeOut" indicates a communication timeout condition, meaning that the remote device stopped responding after 5 seconds.

Any of these faults will cause a "LIN: NETWORK FLT" message to be displayed on the top line of the display. Correct the problem and press the ALARM CANCEL key to clear message.

Following is a list of I/O devices currently supported by the eCNA-150.

ID=1	Console	:	Console Termination Panel #1
ID=2	Console	:	Console Termination Panel #2
ID=3	Booth	:	Booth Termination Panel
ID=4	Aux I/O	:	Auxiliary I/O Board #1
ID=5	Aux I/O	:	Auxiliary I/O Board #2
ID=6	Aux I/O	:	Auxiliary I/O Board #3
ID=7	Aux I/O	:	Auxiliary I/O Board #4
ID=8	MCD-35	:	Film Monitor and Cue Detector #1
ID=9	MCD-35	:	Film Monitor and Cue Detector #2
ID=10	ACP-50	:	Auxiliary Control Panel #1
ID=11	ACP-50	:	Auxiliary Control Panel #2
ID=12	RVC-10	:	Remote Volume Control (analog & digital)
ID=13	QDC-400	:	Quad Dimmer Control Board
ID=14	QDC-400	:	Quad Dimmer Control Board
ID=15	QDC-400	:	Quad Dimmer Control Board
ID=16	QDC-400	:	Quad Dimmer Control Board

Note: The Single Termination Panel P/N 39332 is reported as both a Console and Booth.

Copy

The Copy function can be used to copy Programs or Supervisory data from another eCNA-150. The copy function provides the option for a *Local* copy or a *Network* copy.

Local Copy is used to copy a Program from one location to another. For instance, you may want to copy Program #4 to Program #2 and edit it instead of starting a new program.

Network Copy is used to copy Programs or Supervisory data from a *remote* eCNA-150. This further reduces the amount of data entry, particularly in large multiplexes. Using Network Copy you can only copy program data *from* a remote eCNA-150 to the eCNA-150 that is performing the copy. You are prohibited from copying *to* a remote eCNA-150.

Network Copy

To access the Network Copy screen press [MENU][3][1] and enter the password. The screen will prompt you to select the type of data you want to copy.

Scroll to the type of data you want to copy using the [+] and [-] keys. Below is a list of data types the eCNA-150 can copy.

Supervisory Data
Learn Times 1 through 9
Programs 1 through 9
All Programs

Press [ENTER] and you are prompted to select a source Id. Select a valid Id number and press [ENTER].

Press [ENTER] again to perform the copy. The screen will display the data transfer status screen.

If the copy was successful, the screen will indicate this with a "Network Copy Complete" message. To perform another copy press any key (except for the [MENU] or [HOME] keys).

Local Copy

To access the Local Copy screen press [MENU][3][2] and enter the password. The screen will prompt you to select the program number you want to copy.

"Default 1" is a canned program that can be copied to any other program. The Default 1 program is as follows:

Cue 1-8: Sound - Non-Sync
Lights - Up
Lens & Masking - Flat

Cue 9: Sound - Non-Sync
Lights - Up
Lens & Masking - Flat
Show End

Scroll to the "source" program using the [+] and [-] keys and press [ENTER].

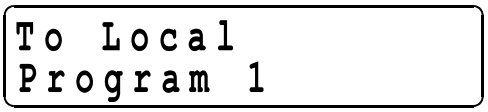

Scroll to the "target" program using the [+] and [-] keys and press [ENTER] again. Press [ENTER] one more time to perform the copy. If the copy was successful, the screen will indicate this with a "Local Copy Complete" message. To perform another copy press any key (except for the [MENU] or [HOME] keys).

Control

This menu item contains special Control Modes for the eCNA-150.

Start Mode allows the user to select either a Manual or Timed start. To select a start mode press [MENU][4][1].

Press the [+] or [-] key to toggle between the "Manual" and "Timed" messages. Press [ENTER] to activate the start mode. When timed start is activated, the user is prompted to enter a time.

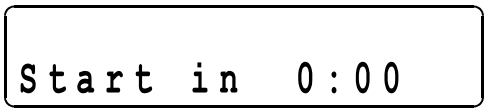

Enter a time with the number keys (minutes:seconds). Press [ENTER] to start the timer.

If Timed start is disabled in Supervisory, the operator is prevented from activating the Timed start mode.

The eCNA-150 can either "learn" cues or use "learned" cues. When the eCNA-150 is running a show in learned mode, it is using the cue times stored for that program. If the eCNA-150 is running a show in learn mode, it is saving cue times for that program.

To select the Cue Learn Mode, press [MENU][4][2].

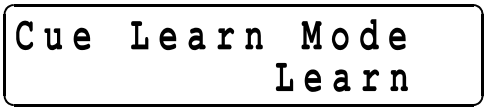

The [+] and [-] keys will select either "Learn" or "Learned" mode. Press [ENTER] to activate the cue learn mode. In learn mode an "L" will appear on the right side of the bottom line of the display.
If Cue Learn Mode is disabled in Supervisory, the operator is prevented from using the "learned" mode.

Programming the eCNA-150

The eCNA-150 is a *single cue* automation. This means that events, such as lens, masking and sound changes, are initiated by a cue (normally foil placed on the film). These events are stored in the eCNA-150's memory and are called *programs*. The eCNA-150 gives the user the ability to build and store up to nine different programs. Each Program can use up to nine cues. Programming is accomplished with the *Programming* keys and the *Program* and *Cue* numbers.

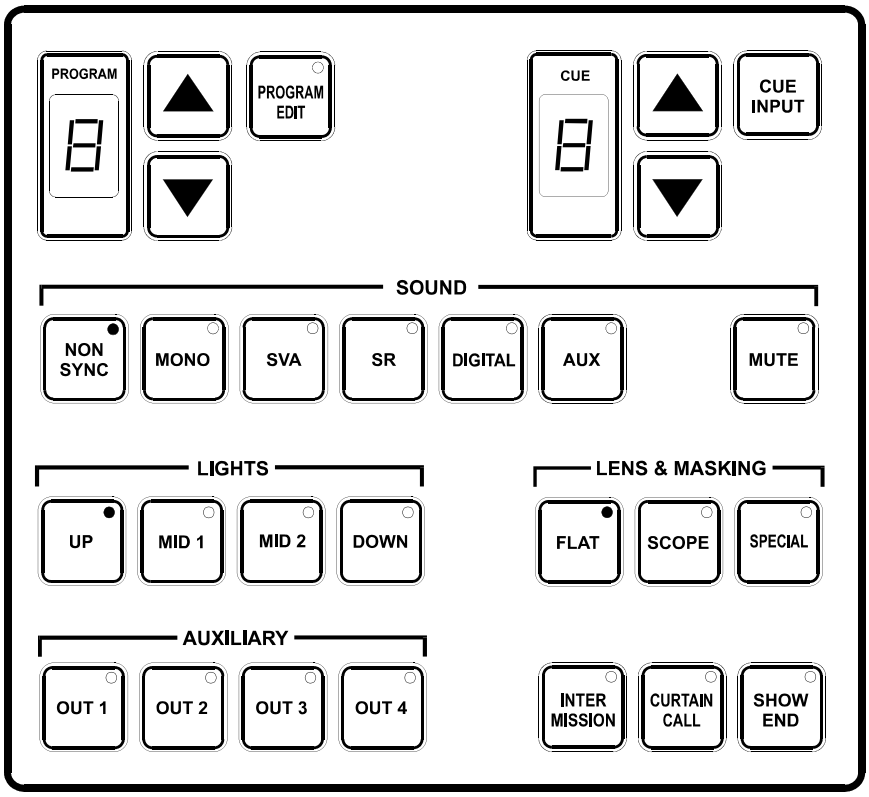

Figure 12

The following steps describe how to edit a program:

1. Press the PROGRAM EDIT key to activate the *edit mode*. The PROGRAM EDIT LED will toggle "on". The CUE up and down arrow keys are enabled and the PROGRAM and CUE displays will stop blinking *if* show is in progress.

2. Select the program to edit with the PROGRAM up or down arrow keys.

3. Program the Sound, Lens and Lights for each cue, starting at Cue 0, using the programming keys. Program the Auxiliary outputs (OUT 1 through OUT 4) if an 'Aux Board' is connected to the system or they are re-assigned to unused relays. (Note: This can only be done via the Host program. See the Set-up Supervisory section of this manual and *Host Program Operators Manual* for more information.) One or more of these outputs can be on at a time.

Note: Cue 0 is the *program start* cue. Cue 0 occurs at the “start” when *not* running in Sync mode and occurs at the “sync cue” when running in Sync mode. So, when programming remember Cue 0 is the first step of the program.

4. Use the SHOW END key to indicate the end of the program.

5. Select a different program to edit or press the PROGRAM EDIT key to de-activate *edit mode*. The PROGRAM EDIT LED will toggle "off". The PROGRAM number and CUE number *up* and *down* arrow keys will be disabled and the displays will slowly blink if the show is in progress.

Following are some simple rules to remember when programming:

Programming a SHOW END cue locks out subsequent cue numbers, keeping you from scrolling to a larger cue number.

You may edit any program while a show is in progress.

You may edit the program that is running, but you cannot change the number of cues.

When a show is in progress and you are *not* in the PROGRAM EDIT mode the PROGRAM and CUE number *up* and *down* arrow keys are disabled.

The LEDs on the programming keys reflect the program that is running, and do not show delays that effect the actual outputs.

The INTERMISSION and CURTAIN CALL Keys

These are two special programming keys that allow the user to easily program a Show Intermission and a Curtain Call. The INTERMISSION key is used to program a show intermission at the selected cue. The cue then initiates the intermission sequence as follows:

Changeover Close
Lights
Sound
Curtain Close
---
7 second delay

Xenon Lamp Off
Projector Motor Off
Slide Projector On

The Intermission is terminated and the show is re-started either by a START input (remote or local) or a CUE input (remote or local). If the show is re-started by a START input, only the projector motor and lamp are turned on. The next film cue will initiate the show start sequence. The show start sequence is as follows:

START

Xenon Lamp On
Projector Motor On

Cue n

Lens/Masking
Lights
Curtain Open
---
7 second delay

Slide Projector Off
---
1 second delay

Changeover Open
Sound

If the show is re-started with a CUE input, there is *no* need for a show start cue. The show start sequence is as follows:

CUE

Xenon Lamp On
Projector Motor On
Lens/Masking
Lights
Curtain Open
---
7 second delay

Slide Projector Off
---
1 second delay

Changeover Open
Sound

The "Curtain Call" function will issue a curtain *close* at a selected cue. For example, suppose you wanted your curtains to close and the end of your trailers and open back up at the start of your feature presentation. You would place a cue at a distance before the end of the trailer that is equal to the curtain close time and another cue at the beginning of the feature. The sequence of events are as follows:

Cue n (with Curtain Call)

Curtain Close
Sound (if programmed)
Lights (if programmed)

Cue n+1

Lens/Masking
Changeover Close
Lights
Curtain Open
---
7 second delay

Changeover Open
Sound

Section 3
OPERATION

Operating the eCNA-150

In the "Ready to Run" state, the FILM PRESENCE LED will be "off", and the START LED will be blinking. Select the program 1 through 9, that you want to run with the up/down arrow keys. Press the START switch to start the show. The START LED will toggle "on".

When a show is running, the current states of the Sound, Lens, Lights and Auxiliary will be shown with the LEDs "on". The cue number displayed is the next cue the eCNA-150 is waiting to see.

Soft Manual Overrides & LEDs

During run mode, pressing any of the Sound, Lens, Lights or Auxiliary keys will drive the output to that state. Note: This will not alter the saved program. At the next cue the program will override any manual changes.

The LEDs on the override keys reflect the program that is running, and do not show delays that effect the actual outputs.

"Next State" feature

Data entry key LEDs show the "next state" of the program. This feature allows the user to see the next programmed instruction without entering the Program Edit mode. The 3 conditions that can be observed from the switch LEDs are:

a) LED On - This is the current state and the next state.

b) LED On 1.8 sec : Off 0.1 sec - This is the current state; the next state is something else (including the *none** state).

c) LED On 0.1 sec : Off 1.8 sec - This is the next state.
* The "none" state is when none of the keys are programmed.

Check Focus Alarm

The Check Focus feature alerts the operator that the show is about to start. In Timed Start the alarm will begin to sound 7 seconds prior to the show starting. This gives the operator time to make any quick adjustments and to insure the image on the screen is in focus.

Cue Learn Function

The eCNA-150 incorporates *cue learn* mode in which cues times for each program “learned” (or stored in memory). On subsequent runs the eCNA-150 expects to see the film cues at a particular time. If a cue is not seen, due to a missing or worn cue foil, the eCNA will automatically "issue" a cue which will advance the program and keep the show running properly. Cue Learn also makes it possible to operate a show without film cue foil at all!

Cue Learn is activated by the operator prior to running a film for the first time or after any change is made to the film itself (adding, deleting or moving cues). Using the internal clock, the eCNA-150 will "learn" the cue times. After learning cue times all subsequent presentations will be run in the "learned" mode. The eCNA-150 will expect to encounter these cues at particular times. If film cues are not encountered within a specified "window", the system will automatically “insert” a cue allowing the program to carry out the next set of instructions. If any of the film cues are missed during a presentation an error message will be displayed at the end the show indicating which cues were missed. The size of the "window" is defined by the Cue Factor Default function in the Supervisory. Note that the Cue Input key on the control panel is always active. Cues can be input manually using the Cue Input key, or foil cues on the film can be sensed by the cue detector.

The Cue Learn function in the Supervisory can be set to Auto, Manual or Disabled. In the Auto mode Cue learn is automatically switched to “learned” after the first run of the program, after which all subsequent runs will be in the "learned" mode. In the Manual mode Cue Learn must be disabled manually by pressing the Cue Learn key. When set for disabled the cue learn function is not accessible.

Cue Window Factor

The Cue Window Factor is a function of the cue times measured. Briefly, in Cue Learn Mode, the system measures the cue times produced using the film cue foils. Thereafter, if cues are missing, the system automatically supplies them. The width of the window is calculated using the Cue Window Factor and is *centered* around the normal cue time. Using this system, the projectionist does not have to be concerned about any missing or errant cues, once cues have been learned.

The cue window is calculated to be sufficiently wide to accommodate any timing variations due to changes in motor speed caused by power line voltage or frequency fluctuations.

The Cue Window is calculated by the following equation:

Cue Window = (CWF value) x (cue location)

EXAMPLE: CWF value = 0.002, cue location = 2 hours

Cue Window = 0.002 x 2 hours or 120 minutes or 7200 seconds

Cue Window = 0.004 hours = .24 minutes = 14.4 seconds

The Cue Window would be interpreted as follows. With a CWF value of 0.002, the eCNA-150 would memorize the cue locations and wrap them in a 0.002 window. If an end cue was sensed at the 2 hour mark, the window would be 2:00:00 +/- 7.2 seconds for a total window of 14.4 seconds.

Illustrated it would look like this:

```
                          END CUE
START                     2:00:00
|---------------------------------|
--->|   |<--- Cue Window of 14.4 seconds
starting at 1:59:52.8 and
ending at 2:00:07.2
```

Given a normal 2 hour presentation with four cues, we could establish a table indicating their respective time locations.

Name	Cue	Time from Start
Trailer	1	0:02:15
Show	2	0:06:32
Credits	3	1:48:26
End	4	2:00:00

Utilizing the same CWF value for each cue, the eCNA-150 would construct a cue window table.

			Cue Window		
Name	Cue	Time from Start	Start	End	Size
Trailer	1	0:02:15	0:02:15	0:02:15	0.3 sec.
Show	2	0:06:32	0:06:31	0:06:33	0.8 sec.
Credits	3	1:48:26	1:48:13	1:48:39	13.0 sec.
End	4	2:00:00	1:59:53	2:00:07	14.4 sec.

Under normal conditions the eCNA-150 will only recognize cues within the four established windows. If none are sensed it automatically inserts one at the end of a window which maintains your professional presentation. If cues are sensed outside the windows, they are assumed false and ignored.

The value of the cue window factor is determined by analyzing your local utility company's power fluctuations. This is done with the eCNA-150. Simply keep the unit in the Cue Learn Mode for several days. After each presentation of the same show, record the cue values displayed in the Cue Learn setup screen.

To analyze the values, determine the maximum fluctuation in overall run time.

EXAMPLE: LEARNED CUE VALUES

Cue	Show 1	Show 2	Show 3	Show 4	etc.
Cue 1	0:01:00	0:01:00	0:01:01	0:01:01	----------
Cue 2	0:04:00	0:04:00	0:04:01	0:04:01	----------
Cue 3	1:45:00	1:45:14	1:45:08	1:45:34	----------
Cue 4	1:55:00	1:55:16	1:55:09	1:55:36	----------

The widest fluctuation would be between shows 1 and 4. To estimate the CWF value, calculate the average fluctuation in run time by simply subtracting the low overall run time from the high overall run time (1:55:36 minus 1:55:00) and divide by 2. Then divide this number by the average run time [(1:55:36 + 1:55:00) divided by 2].

The result is as follows:

Average fluctuation = (HIGH VALUE - LOW VALUE) divided 2
= (1:55:36 - 1:55:00) divided by 2
= (0:00:36) divided by 2
= 18 seconds

The average run time is simply calculated as follows:

Average run time = (HIGH VALUE + LOW VALUE) divided by 2
= (1:55:36 + 1:55:00) divided by 2
= 3:50:36 divided by 2
= 1:55:18 or 1 hour, 55 minutes and 18 seconds

The deviation is calculated as follows:

Deviation = AVERAGE FLUCTUATION/AVERAGE RUN TIME
= 0:00:18/1:55:18 (convert to seconds)
= 18 seconds/6918 seconds
= .002602

Your Cue Window Factor should not be less than the deviation. In our example the Cue Window Factor should not be less than 0.003.

We recommend adding 0.002 to the calculated three digit value. In our example the value in three digits is 0.005. A logical CWF should be 0.005.

The CWF value of 0.005 is logical in light of actual conditions. If you find lights coming up early at credits, you may wish to open the credit window up with a larger value. Remember, every 0.001 equals an increase in the window size of 3.6 seconds for every hour of movie length.

Our investigation indicates that power fluctuations normally represent a speed fluctuation of less than 0.1 percent (CWF value of less than 0.002).

Synchronous Operation

The eCNA-150 systems are capable of running film synchronously in a multi-projector booth. The eCNA-150 can be programmed for any one of nine sync loops. This allows for up to nine different sync loops on the network at one time. Pressing the SYNC key will activate the sync operation and disable the up/down arrow keys. (This prevents the machine from joining another sync loop that is running and causing a fault on those machines when it drops off the loop.) To change the SYNC LOOP number, press the SYNC switch to deactivate. Set the loop number with the up and down arrow keys and press the SYNC switch again to activate. The LED on the SYNC switch indicates whether sync mode is active.

To run in sync the following conditions must be true:

1. A *sync cue* must be added to the beginning of the film. This is the first cue that is seen by the automation. It acts to initiate the start up sequence for each machine.

2. Sync Mode on each automation in the loop must be enabled.

3. The sync loop number on each automation in the loop must be the same.

To begin a movie, insure that the sync cue is positioned somewhere before the cue detector on the first machine. Press the [START] switch on any machine in the loop. All projectors will start simultaneously. As the sync cue passes through each projector, the show start sequence will initiate.

At the end of the show each machine will shut down independently as the tail of the film runs out of the projector. On endless loop systems all projectors will continue to run until the last machine sees the end cue. At that time all projectors will shut down simultaneously.

System Status Messages

The eCNA-150 contains a list of status messages that can be displayed due to various internal or external conditions. Most of these messages displayed indicate system faults. There are also some internal power up and reset diagnostic messages, most of which will not and should not be displayed under normal operating conditions.

Fault Condition Messages

The Fault Condition messages can be divided into three categories: Internal *Memory* faults, *Local* faults and *Network* faults

Memory Faults

The internal memory faults are generated when there is a "checksum" error. Briefly, a checksum is an arithmetic sum of the contents of memory that is stored in the memory itself and is re-computed and checked each time the eCNA-150 is powered up.

Program Memory Fault

Each of the Programs (1 through 9) have a checksum. The Program Memory Faults are indicated on the LCD display screen.

The Program Memory Faults are also displayed and "blinked" rapidly on the three LED displays.

Message	Description
P 0 1	Program 1 Checksum Fault
P 0 2	Program 2 Checksum Fault
P 0 3	Program 3 Checksum Fault
P 0 4	Program 4 Checksum Fault
P 0 5	Program 5 Checksum Fault
P 0 6	Program 6 Checksum Fault
P 0 7	Program 7 Checksum Fault
P 0 8	Program 8 Checksum Fault
P 0 9	Program 9 Checksum Fault

If any of the *Program* memory faults are displayed on power up, *clear* the fault by pressing the ALARM CANCEL key. Press the PROGRAM EDIT key to enter the edit mode. Cursor to the program that has the checksum error. Scroll through the program to verify that it has not changed. If all the steps look okay, press any key

to re-calculate the checksum. Press the PROGRAM EDIT key again and cycle power to verify that there is no other checksum errors.

Set-Up Parameters Memory Fault

A *Set-Up Parameters* memory fault will be displayed if there is a checksum error.

LCD display screen message:

LED Display message:

Message	Description
P A r	Set-Up Parameters Checksum Fault

If any of the *Set-Up Parameters* memory faults are displayed on power up, *clear* the fault by pressing the ALARM CANCEL key. Enter the Set-Up menu and verify all data. Correct any data errors and press the HOME key to re-calculate the checksum. Cycle power to verify that there is no other checksum errors.

Synchronous Interlock Faults

Synchronous Interlock faults alert the operator that a problem exists with a eCNA on the sync loop. These faults will either stop the show and sound the alarm or prevent a show from starting.

A **Local Sync Interlock Fault** is caused when either a master or one of the slaves in the sync loop has lost it's sync input (sync switch). All eCNA-150s on the sync loop will display "L S I" on the LED displays and sound their alarms. This message will also be displayed if one of the units on the loop had a "watchdog reset". If this was the case, all units will display this message except for the one that had the watchdog reset.

LED Message: **L S I**

LCD Message:

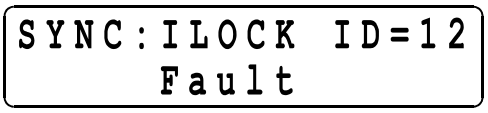

A **Local Sync Communications Timeout Fault** is caused when there is a loss of communications with a unit on the sync loop. This could be due to a loss of power of the master or one of the slaves on the loop. In this case all units on the sync loop would display "L S C" except for the one that lost its power. This fault can also be caused by defective wiring, such as an open or short on the LSN communications link.

LED Message: **L S C**

LCD Message:

```
SYNC:T/O    ID=12
     Fault
```

These next three faults indicate that the master or one of the slave eCNA-150s is preventing the interlock loop from *starting* or *resuming* a show. The LED message is the same for these faults, but the LCD message is more descriptive.

The **Not Ready To Resume Fault** indicates that the automation cannot start a show because a least one of the eCNA-150 remotes are not in the "Ready to Resume" condition.

LED Message: **L S r**

LCD Message:

```
SYNC:RES    ID=12
     Fault
```

The **Need Master To Resume Fault** indicates that there is no master. The master may be lost if the communication wires are disconnected, power is lost or the sync input (sync switch) is not enabled at the master.

LED Message: **L S r**

LCD Message:

```
SYNC:NO MASTER
     Fault
```

The **Not Ready To Run Fault** indicates that the automation cannot start a show because a least one of the eCNA-150 remotes are not in the "Ready to Run" condition

LED Message: **L S r**

LCD Message:

```
SYNC:RUN    ID=12
     Fault
```

The **Sync Remote Stop Fault** indicates a fault on a remote eCNA when interlocked. The Sync Loop number will blink. Correct the problem to clear the message.

```
SYNC:REMOTE STOP
     Fault
```

Local Faults

The **Local I/O Network Fault** is caused due to a loss in communications with a Local I/O Network device or another network problem. This could be the Booth Termination Panel, Console Termination Panel or other I/O Network device or a wiring problem.

A Local I/O Network fault will cause the eCNA-150 to display "L I n". This fault will cause a shutdown during a show or prevent a show start between shows. This fault is latched and you are required to press the ALARM CANCEL key to clear the fault. Although this will cancel the fault and allow a show to start, there is a problem with the Local I/O Network or one of the devices and it must be repaired.
LED Message: **L I n**

LCD Message:

```
LIN:NETWORK FLT
      Fault
```

The **Film Failsafe Fault** indicates that the film failsafe does not sense film presence or the film tension is excessive. Correct the problem to clear the message.

```
FILM:FAILSAFE
      Fault
```

The **Film Motion Fault** indicates that the film motion sensing device did not detect the proper film speed after 2 seconds. Press the ALARM CANCEL key to cancel the alarm.

```
FILM:MOTION
Fault - Alarm
```

Press the ALARM CANCEL key again to clear the fault message.

```
FILM:MOTION
      Fault
```

This fault indicates that the xenon lamp failed to light after 10 seconds. Press the ALARM CANCEL key to clear the message.

```
XENON LAMP FAULT
      Fault
```

Status Messages

eCNA-150 status messages notify the operator that a particular action needs to be performed. The network start and stop messages let the operator know that a start or stop input is asserted either at a remote control station on the LSN or LIN.

```
LSN:REMOTE STOP
    Resume?
```

```
LSN:REMOTE START
    Running
```

```
LIN:REMOTE STOP
    Resume?
```

```
LIN:REMOTE START
    Running
```

This is the **Remote Alarm** status screen. This message indicates that a Fault-Alarm condition exists at a remote eCNA-150, where the number is the eCNA Id number.

```
REMOTE ALARM 12
    Running
```

The **Faults Defeated** message serves as reminder to the operator that the Film Presence, Film Motion, Film Tension and Xenon Faults are bypassed. Press the FAULT DEFEAT key to toggle this function on or off.

```
FAULTS DEFEATED
  Ready to Run
```

The **Low Battery Fault** indicates that the battery has gone below a pre-determined threshold voltage during a power down condition. If this message is displayed along with any memory fault messages, the low battery condition probably caused the other memory fault(s).

```
LOW BATTERY FLT
     Fault
```

Power Up Messages

The eCNA-150 will display two messages at a normal power up. The software version number, checksum number and type of reset will be displayed.

```
CNA-150    V5.010
CHECKSUM = 19815
```

```
CNA-150    V5.010
 POWER UP RESET
```

Additional Software

CineNet Host Software Package

The eCNA-100 automation is optimally configured and used with the CineNet HOST software package. The Host program allows setup, data transfer and programming in a user-friendly format. Additional hardware and software is required. First there must be a Host Computer, this can be any DOS-based PC with either 1 free ISA slot or an RS-232 Serial port that is not in use, installed on that PC there must be CineNet Host networking software. This software allows the PC to interface with the CNA. The only additional piece of hardware required is a proprietary network controller. This can be in the form of a ISA card installed in the PC, or a convenient external package such as the VNC or PCI-64 network interface.

See the CineNet HOST user manual for further details on installation.

Host software provides Event logging, both LIN and LSN Network status, configuration, and programming/ copy functions.

CineSuite Software Package

The CineSuite software package is a more advanced version of HOST software including three software applications:

CineSuite Manager: This is the main user interface.
CineSuite Router: The CineSuite Router is used to manage traffic between the various CineSuite applications.
CineNet Driver: This is the software application that connects the CNA Gateway and automations to the computer.

The CineSuite software operates over TCP/IP communications protocol meaning that it can be used in conjunction with the internet via a modem or any ethernet connection. It allows remote access to the automation network and provides a means of remotely monitoring devices on the LIN.
CineSuite Reporter software has a full color interface for quick identification of remote problems. Reporter can also email status reports managerial personnel and generate reports over long periods of time in order to quantify efficiency in staff and equipment.
CineSuite similarly requires a Host PC and a hardware interface device. The Host PC must be at least a 486/66Mhz running windows 95 or above. The CineSuite package is constantly under development with new features being added regularly. See the CineSuite Guide for additional information.

Timing Diagrams for the eCNA-150

The following Timing Diagrams show timer values, output configurations and cue events for all the outputs. These timing diagrams can be extremely useful to help understand the operation and capabilities of the eCNA-150. The first timing diagram shows the "Standard Operation" from power up to show end. Standard Operation implies a running a program with no interruptions (stop or faults) or special effects (curtain call or intermission). The defaults for each outputs are indicated in the last column of the timing diagram. Default timer values and pulse durations are indicated in the bottom margin of the timing diagram. The diagram indicates automatic and programmed outputs.

The second timing diagram shows the Fault/Stop Shutdown and Restart Sequence. The area of interest is the shaded portion of the diagram. This shows the default 'Fault-to' conditions:

Projector Motor and Lamp = OFF
Slide Projector = ON
Changeover = CLOSE
Sound = NON-SYNC
House Lights = UP
Stage Lights = UP

These default conditions can be configured in the eCNA-150 Set-up Supervisory section of the Host PC Program.

The third timing diagram shows the Intermission Stop Sequence. The area of interest is the shaded portion of the diagram. At the Intermission cue the Changeover and Curtain will close. Seven seconds later the Projector Motor will shut off and the Slide Projector will turn on. Sound, Lights and Out 1, 2, 3, and 4 can be programmed for any state during the intermission. A Restart will start the Projector Motor and a film cue will initiate the show start sequence.

The fourth and last timing diagrams show the Curtain Call Sequence. The area of interest is the shaded portion of the diagram. The 'curtain close time' is determined by the distance between the curtain call cue and the next film cue. Sound, Lights and Out 1, 2, 3, and 4 can be programmed for any state during the Curtain Call.

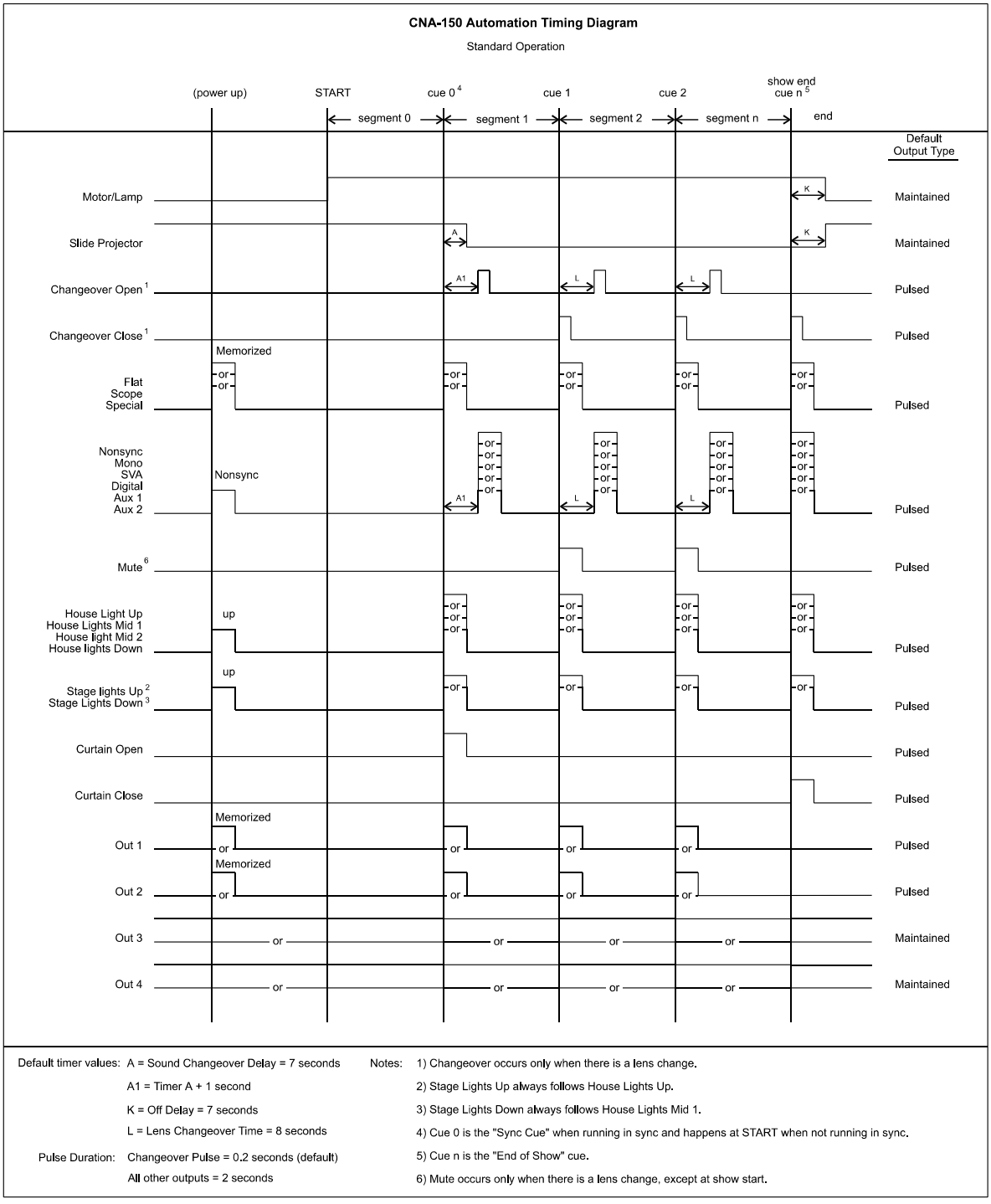

Timing Diagram 1

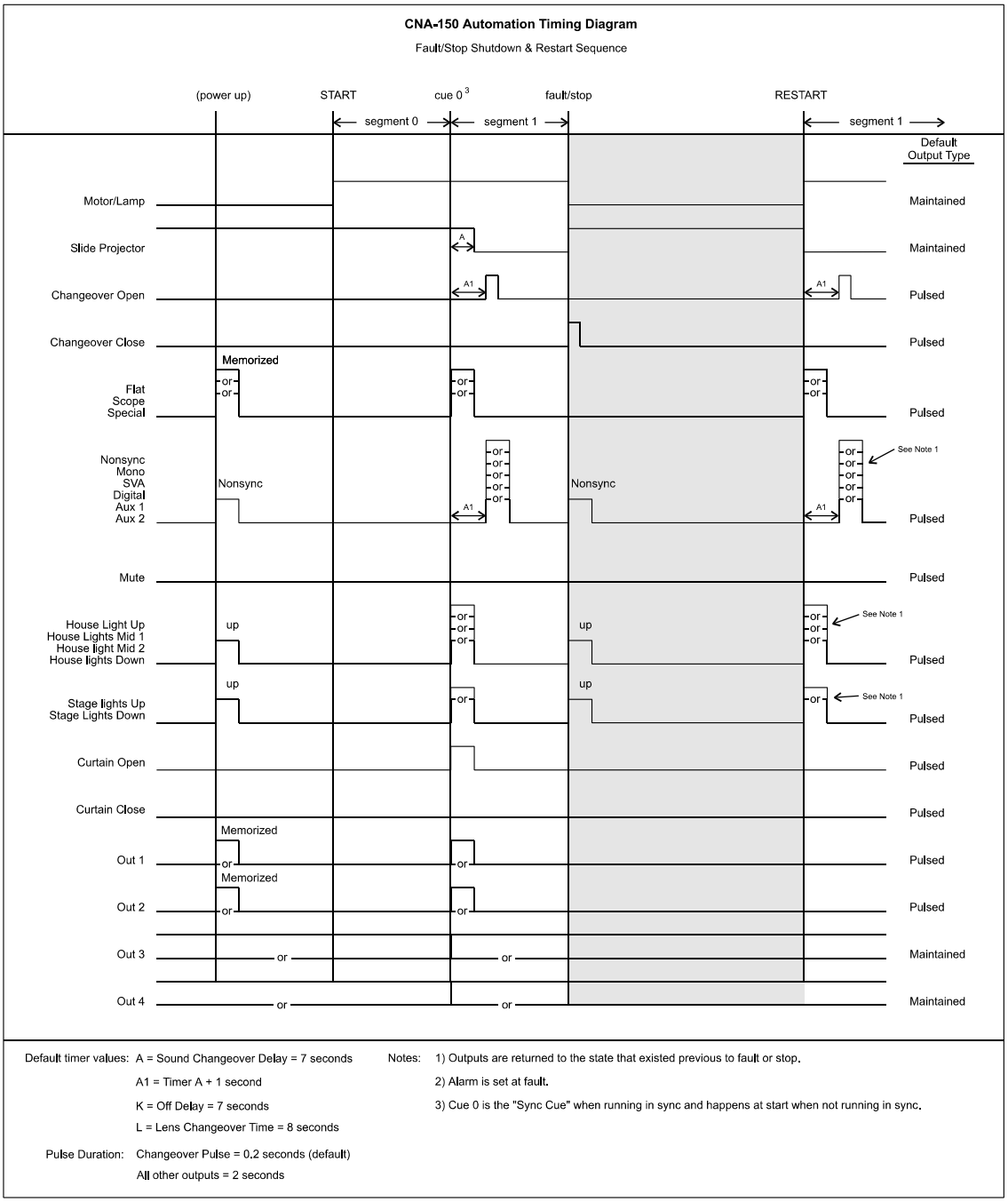

Timing Diagram 2

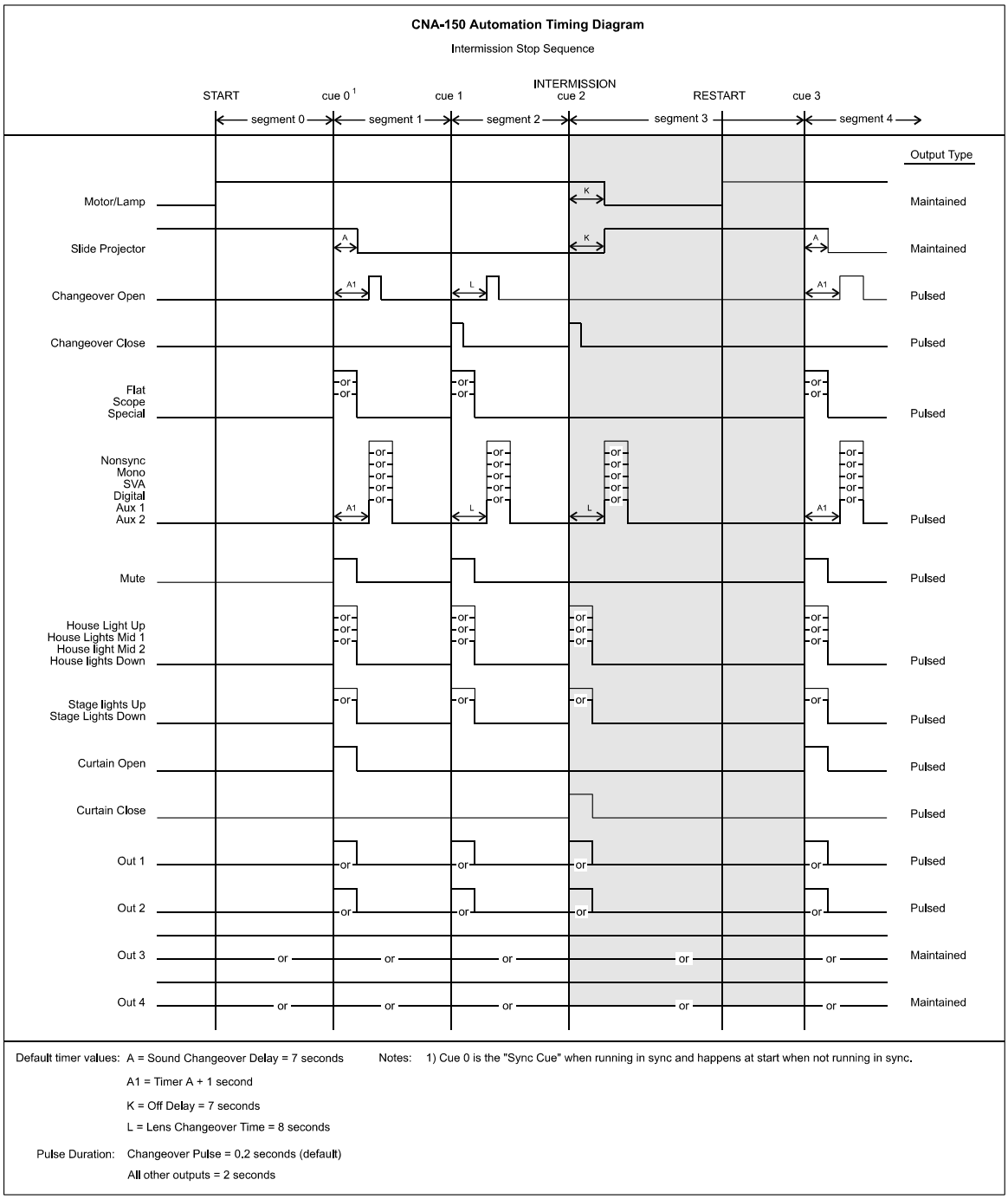

Timing Diagram 3

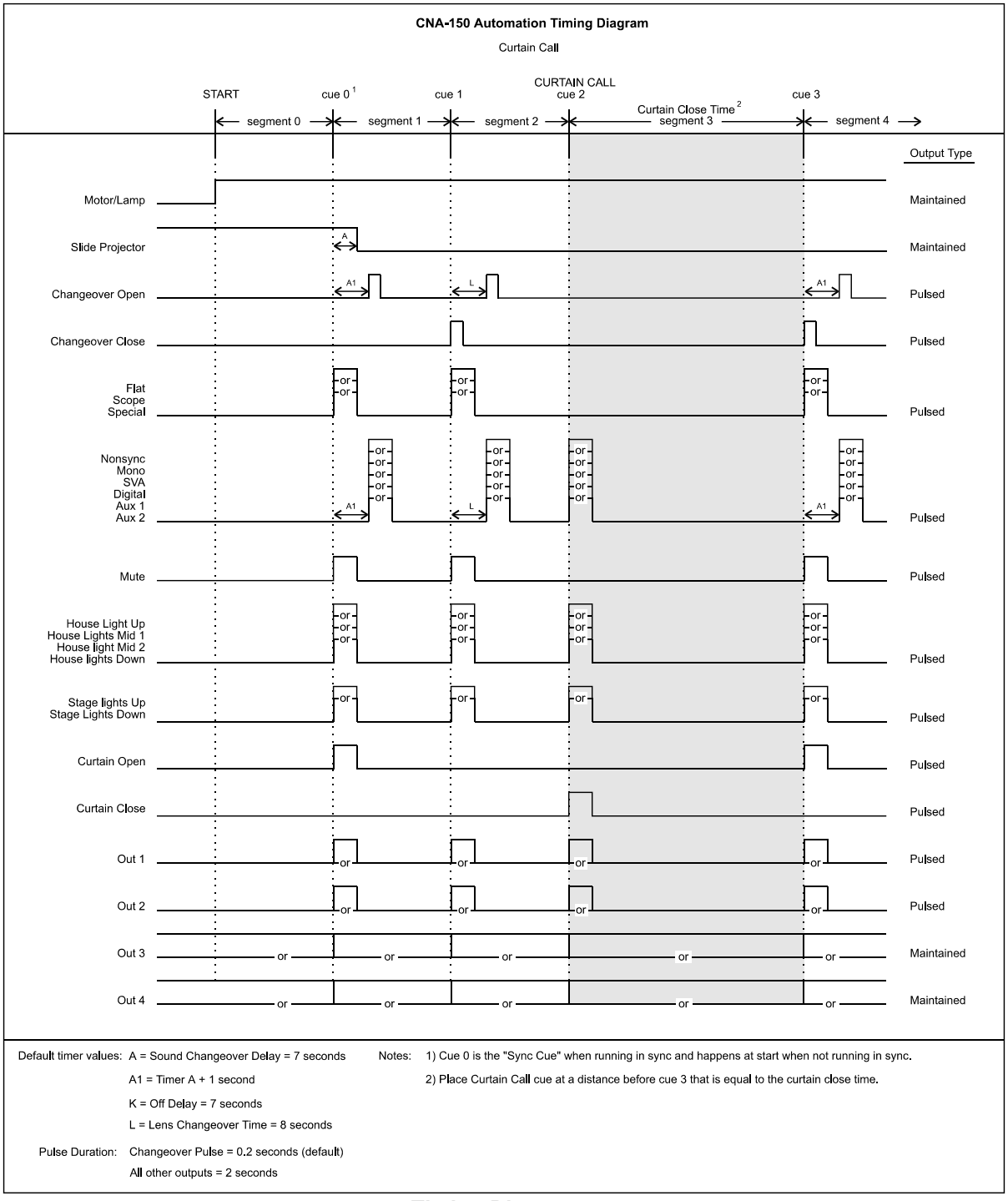

Timing Diagram 4

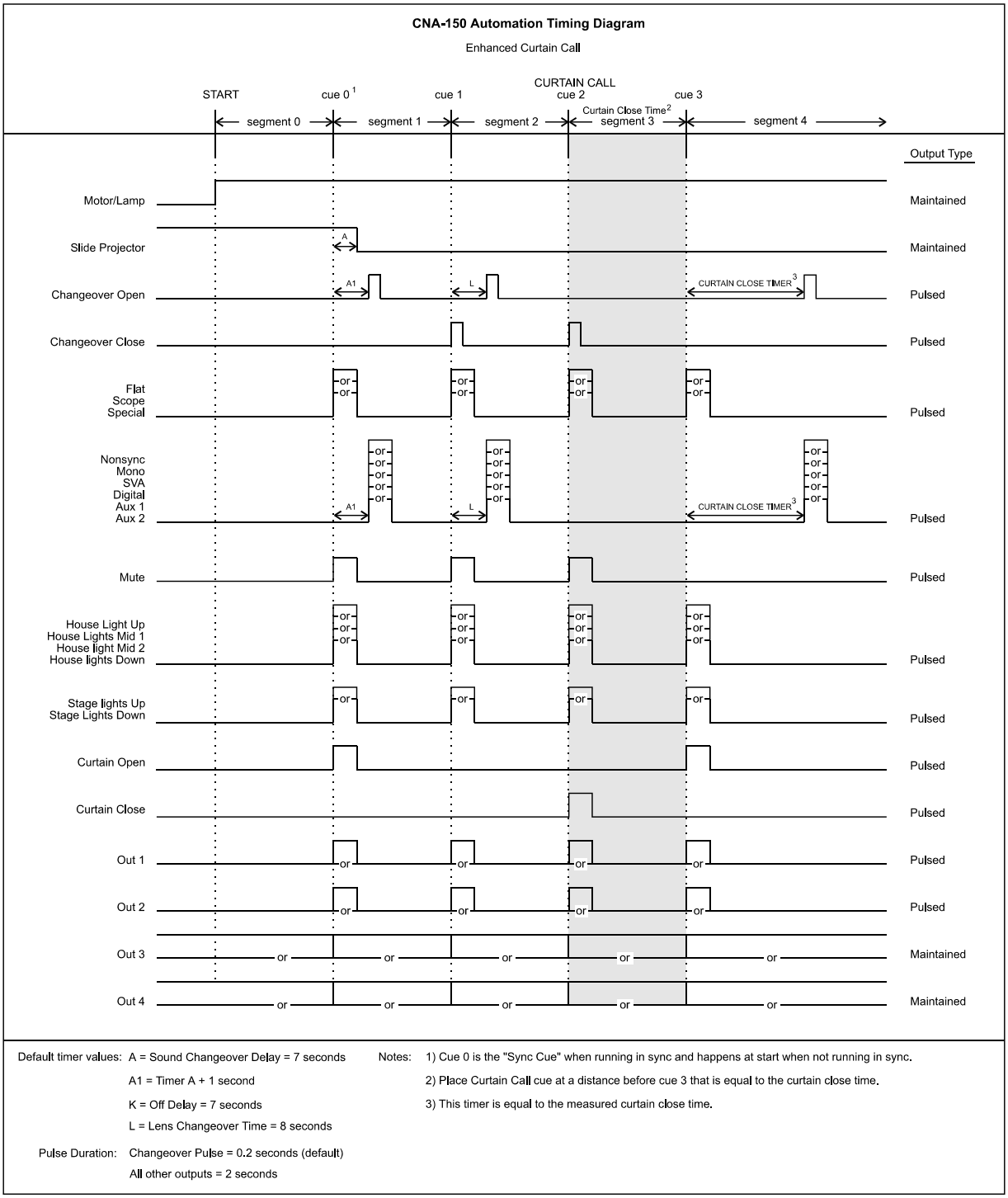

Timing Diagram 5

ADDENDUM
Software Changes

This section details the eCNA-150 software changes.

Version: 4.010
Checksum: 103
Date: 1/27/05

Added new System Parameters flag to allow better control of the Password. This new flag now "overrides" the existing DIP Switch control as follows:

Flag	Description
Default	Use the existing S2-5 logic (On=password, Off=no password).
Off	No password required (regardless of S2-5 setting).
On	Password required (regardless of S2-5 setting).

If you are using a Host program with the Network, setting this flag to other than the "Default" state requires a new version of the Host Program or you may loose this setting at the CNA.

Added Edit field to Setup CNA System screen 140 to allow changing this flag locally:

[Password Control]
[Default]

S3-6 inhibits the serial output flag that causes the RCM-10/RSM-10 Remote Station to sound the alarm for the "Check Focus Delay" when the CNA starts a show. The Switch settings are as follows:

S3-6	Description
Off	Enable the RCM-10/RSM-10 "Check Focus Alarm".
On	Disable the RCM-10/RSM-10 "Check Focus Alarm"

Added logic to Screen 111 Setup CNA System to edit the password.

[Password]
[1234]

This new parameter replaces "spare" bytes that should be zero, which will cause the password to be defaulted the first time this version is run. (This results in a "MEM FLT:SET-UP" the first time (only).)

Added programmable "power-up" states for:

Masking	(Flat, Scope, Special, None, No-op)
Sound	(Non-Syn, Mono, SVA, SR, Dig 1, Aux 1, Dig 2, Aux 2, Mute Off, Mute On, No-op)

At this time these states can only be defined at the Host.

Added programmable "fault-to" states for:

Lens	(Flat, Scope, Special, None, No-op)
Masking	(Flat, Scope, Special, None, No-op)
sound	(Non-Syn, Mono, SVA, SR, Dig 1, Aux 1, Dig 2, Aux 2, Mute Off, Mute On, No-op)
House Lights	(Up, Down, Mid 1, Mid 2, No-op)
Stage Lights	(Up, Down, No-op)

At this time these states can only be defined at the Host.
Fixed 2 places that were implemented differently than the CNA-200:

a. Reworked Feature Start Time Routine (FNFST) to return the same parameters as the version in CNA-200. This (clock start) feature is not enabled but the Content Player Logic for status calls this routine.

b. Also fixed call to Log "Automatic Cue 0 Event" to set the $20 bit in CUEFLG prior - previous version might not have logged this event.

Corrected Flash Status Subroutine (FST) to correct possible Watchdog trip when the Host accesses the Flash Status information.

Version: 4.020
Checksum: 179
Date: 4/18/05

Now correctly displays the eCNA-100 Version on power up

Version: 4.030
Checksum: 237
Date: 4/28/05

Fixed debug screen version number format, changed P8 edit logic operation to allow proper configuration of mac address: xx-xx-xx-xx-Dx-xx (Previous versions would not allow proper reconfiguration of MAC address with a "D" in the shown location)

Bootloader Changes:

This section documents changes in the eCNA's bootloader program structure:

eCNABOOT v2.000
Checksum: 57159
Date: 4/20/04

This version requires eCNA mainboard 39425

Modified chip select and H16 initialization to run in the new eCNA mainboard. Note: source was not ported to Metrowerks for this

eCNABOOT v2.00a
Checksum: 55153
Date: 8/10/04

Ported over to metrowerks. Modified chip select and H16 initialization to run in the new eCNA mainboard with 29f040 flash. Added tcp/ip stack and dumb term task to support ethernet config on P8. Added basic HTTP web configuration support. Added LSN packet routing support for new TCP host. The CNA listens on port 16000.
Added S3-1 default internet parameters function, S3-2 TCP host routing enable, Default MAC ID is automatically defaulted to 00-d0-ad-ff-00-01 if found invalid. increased shut-down delay for go to app and go to bootloader from 5-7 seconds.

eCNABOOT v2.010
Checksum: 4126
Date: 1/21/05

Updated TCP/IP stack to v1.1.0
PGPO is now initialized low for compatibility with the next rev of hardware.

eCNABOOT: v2.020
Checksum: 1293
Date: 4/28/05

Fixed edit logic for MAC ID on dumb-term (P8 Port). Previously could not re-edit ID# if it had a "D" in location: xx-xx-xx-xx-Dx-xx

Index:

10Base-T 20
Alarm 24
Alarm Cancel 6
CAI 2
Cat5 20
Check Cue fault 32
Check Focus Alarm 15, 47
Check Focus delay 14
Checking the Network 25
Control 40
Copy 39
Copy, Local 40
Copy, Network 39
Cue factor default 31
Cue input 6
Cue Learn 47
Cue learn Mode 32
Cue Number 5
Cue Window 48
Curtain Call key 44
Default parameters 15
Description 3
DHCP 22
Diagram, Functional 23
DIP switches 11
Display Messages, Memory 53
Dumb-Terminal 16
Embedded HTML server 19
Ethernet 20
Ethernet configuration menu 16
Failsafe delay 31
Fault Messages 52
Gateway IP. 18
HTML-Based Configuration 18
Interface Hardware 20
Intermission key 44
Intranet 22
Introduction 1
IP 18
IP configuration 19
Keypad 5
LAN 18
Learn Times 36
Lens Changeover 31
Lens Changeover Delay 31
Lens Changeover Pulse 31
LIN 3

Local Area Network 18
Local faults 55
Loop number 6
LSN 3
Menu Structure 27
Missed Cue fault 33
Network Copy 39
Network Status 37
Next State 46
Operation 46
Operator interface 4
Overrides 46
P8 20
Power up Messages 57
Product description 3
Program edit 5
Program Number 5
Programming 42
Remote Stop 33
RJ45 16
Router 22
RS-232 serial port 20
Setup 27
Setup Dimmer 34
Setup, Learn Times 36
Sound Changeover 31
Sound Changeover Delay 31
Start 5
Static IP 22
Status LED's 24
Status Messages 52
Stop 6
Structure, Menu 27
Subnet mask 18
Sync 6
Synchronous Operation 51
System 4
System Overview 2
TCP Host 15
TCP/ IP network protocol 2
TCP/ IP Networking 22
TCP/IP 2
Termination Panel, Booth 9
Termination Panel, Console 8
Termination Panel, Dual 8
Termination Panel, Single 7, 10
Termination Panels 7
Timed Start 32
Timing Diagrams 58

List of Illustrations:

Figure 1: Front Panel Illustration
Figure 2: DIP Switch Settings
Figure 3: LSN ID Table
Figure 4: P8 TCP/IP Setup Screen
Figure 5: HTML Welcome screen
Figure 6: HTML Status screen
Figure 7: HTML Password query
Figure 8: HTML TCP/IP Configuration screen
Figure 9: Communications Interface connector location
Figure 10: Ethernet Connection Example
Figure 11: Network Status LED's and Alarm Jumper Location
Figure 12: Keypad Illustration

Timing Diagram 1: Standard Operation
Timing Diagram 2: Fault, Shutdown, Restart Sequence
Timing Diagram 3: Intermission Stop Sequence
Timing Diagram 4: Curtain Call Sequence
Timing Diagram 5: Enhanced Curtain Call Sequence

eCNA-150 Major replacement parts:

Below is a listing of the major components that make up the eCNA, use this table when ordering replacements or inquiring about repairs.

Part Description	Strong P/N	EPRAD P/N
CNA Power Supply PC Board	5198304	39328
CNA Power Transformer		64011
DPST Rocker Switch, Power and Overrides		39336
SPDT Rocker Switch, Overrides		39337
SPDT Rocker Switch, Overrides		39338
DC Power Harness (Power supply to CPU board)		39309
Piezo Transducer (Alarm)		39307
eCNA CPU Board		39425-1
CNA-150 Display PCB		39324-PCB
CNA-150 Front Panel (Keypad Overlay, Switches and Metal)		39521
CNA-150 LCD (Display Only)		64060